MC51A SUB CIRCUIT DIAGRAM

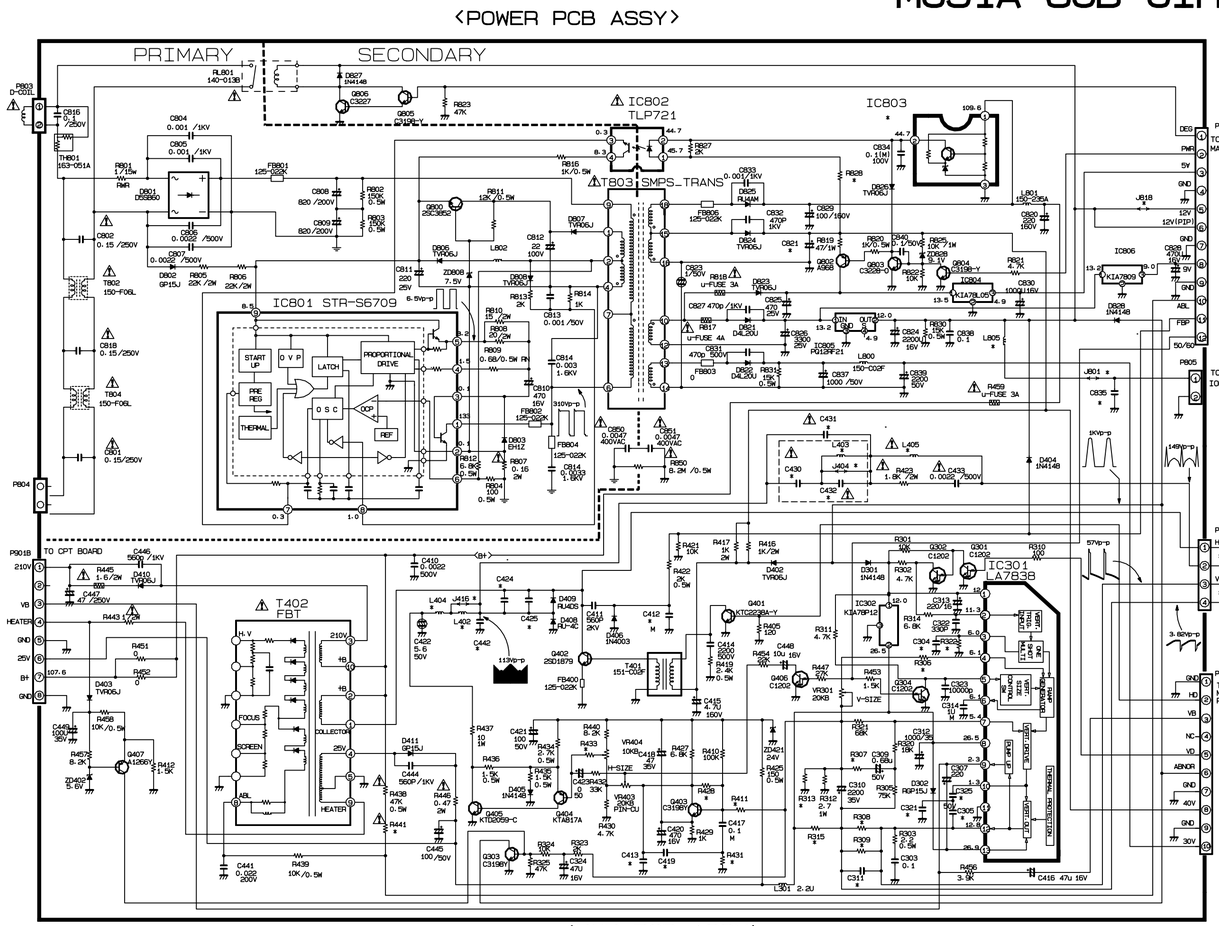

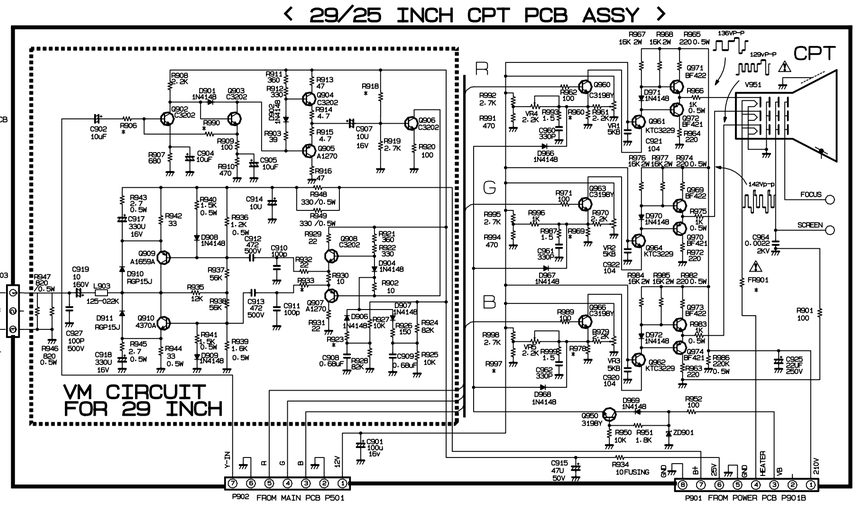

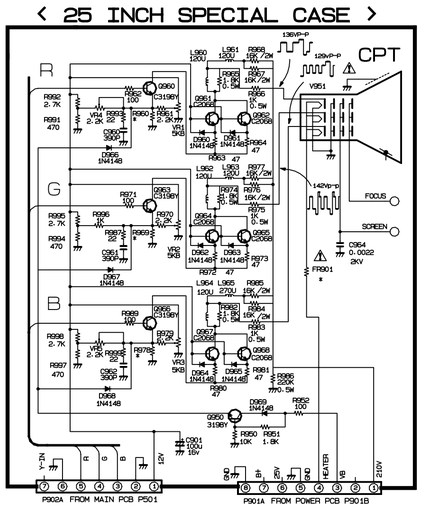

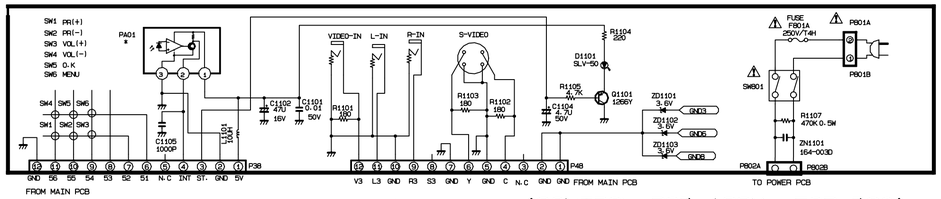

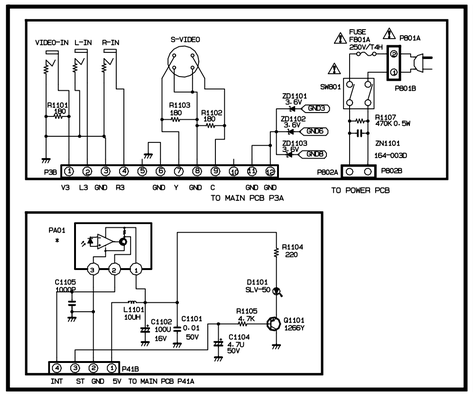

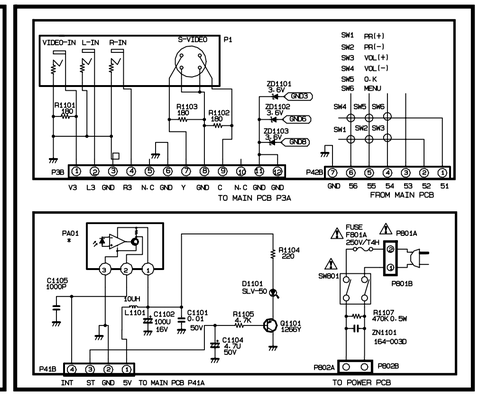

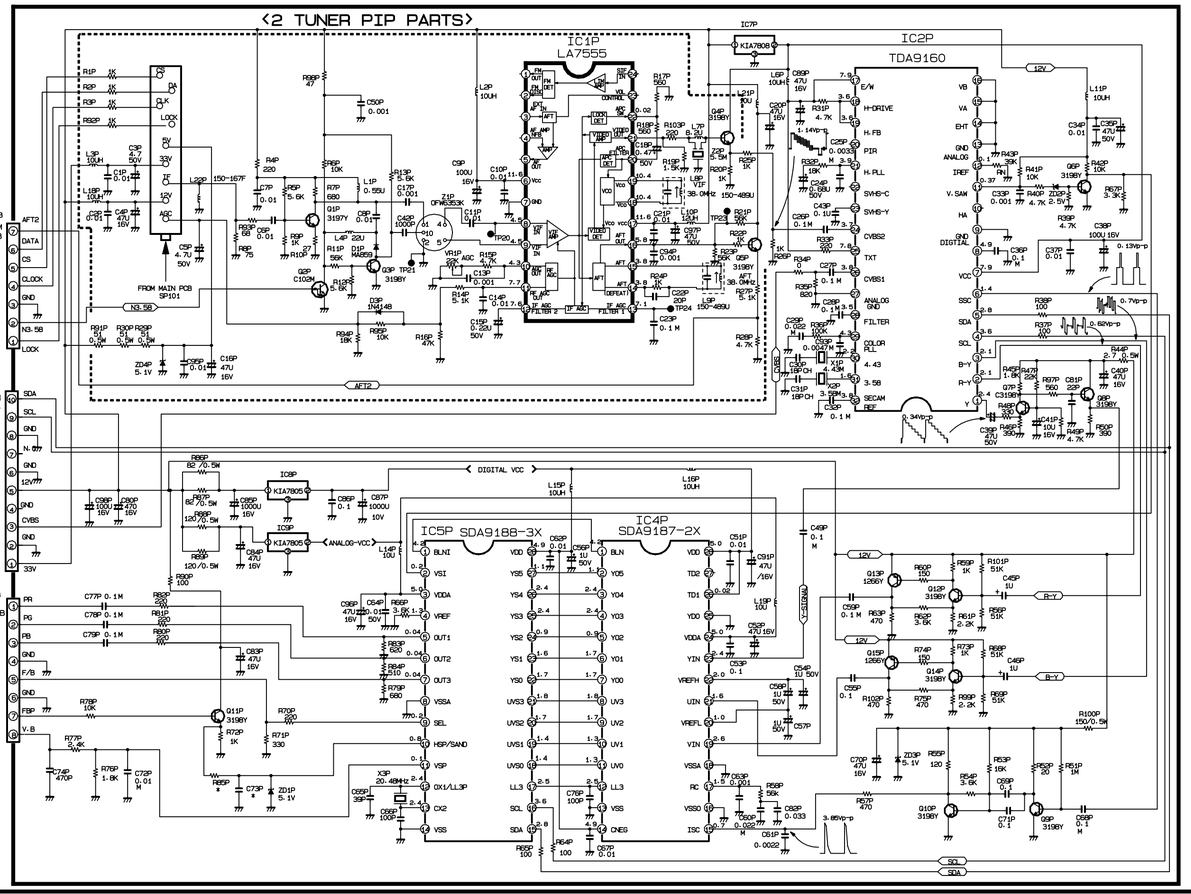

NOTICE

Since this a basic circuit diagram, the value of components and some partial connection are subject to change for improvement.

The components marked ⚠ conform to VDE or IEC guide-lines and are essential for safe operation of the set, while those marked ⚠ are required for correct operation. Use specified parts only when replacing.

Value of resister, capacitor and inductor

1. Resistances are shown in ohm. K=1,000. M=1,000,000.
2. Unless otherwise noted in schematic, all capacitor values less than 1 are expressed in uF and the values more than 1 in pF. The sign of (M) in schematic means MYLAR CAPACITOR.
3. Unless otherwise noted in schematic, all inductor values more than 1 are expressed in uH.

Observation of voltage and waveforms

1. Voltages with VTVM from point shown to chassis ground. Signal pattern is color-bar.
2. The schematic shown is representative only.
3. All waveforms are taken using a wide band oscilloscope and a low capacity probe.
4. Check Fine tuning, AGC, Brightness, Contrast and Colour for best picture, make sure that Colour, Brightness are in mid position and Contrast is in 100%.

✳ <POWER/CPT/PIP/CON. CONVERSION PARTS>

CAT.	REFERENCE NAME	CF29C44/C80/B20	CF-29C60/70	CF-25C44/C80	CF-25C60/C70
POWER PCB ASSY	R306	39K 1/6W	47K 1/6W	39K 1/6W	47K 1/6W
	R307	7.5K 1/6W	7.5K 1/6W	7.5K 1/6W	5.1K 1/6W
	R308/309	470 1/2W	430 1/2W	470 1/2W	680 1/2W
	R313	2.7 1W	2.7 1W	2.7 1W	2.2 1W
	R315	470 2W	820 1W	820 1W	470 2W
	R322	68K 1/6W	47K 1/6W	68K 1/6W	47K 1/6W
	R411	12K 1/6W	13K 1/6W	12K 1/6W	11K 1/6W
	R428	240K 1/6W	270K 1/6W	240K 1/6W	240K 1/6W
	R431	30K 1/6W	33K 1/6W	30K 1/6W	39K 1/6W
	R441	20K 0.5W	39K 1/2W	47K 1/2W	47K 1/2W
	R443	1.0 2W	1.4 2W	1.0 2W	1.0 2W
	C304	0.01U 100V	0.0056U 100V	0.01U 100V	0.0056U 100V
	C305/325	20P 50V	20P 50V	20P 50V	-
	C311	0.033U 100V	0.022U 100V	0.033U 100V	0.022U 100V
	C321	-	-	-	22P 50V
	C412	0.01U 100V	0.0068U 100V	0.0056U 100V	0.0056U 100V
	C413	0.47 50V	0.33U 50V	0.68U 50V	0.33U 50V
	C419	0.1U 50V	0.068U 100V	0.1U 50V	0.1U 50V
	C424	0.0068U 1.6KV	0.0086 1.6KV	0.01U 1.6KV	0.01U 1.6KV
	C425	0.012U 1.6KV	0.0082U 1.6KV	0.012U 1.6KV	0.0082U 1.6KV
	C430	0.27U 400V	0.1U 630V	0.33U 400V	0.62U 400V
	C431	0.36U 400V	0.47U 200V	0.22U 400V	0.62U 400V
	C432	0.62U 200V	-	0.5U 200V	-
	C442	0.1U 630V	181-060F	0.039U 630V	181-060F
	L402	150-C02H(100U)	-	-	-
	L403	150-W01A(24U)	-	-	-
	L404	150-C02L(120U)	150-C02N(600U)	150-C02N(600)	150-C02N(600U)
	L405	150-L01D(20U)	150-L01D(20U)	150-L01F(22.8U)	150-L01F(22.8U)
	D803	SE110N	SE120N	SE110N	SE120N
	T803	151-A01M	151-A01S	151-A01M	151-A01T
	T402	154-238A	154-238C	154-238A	154-238C
	J404/416	-	TIN-WIRE	-	TIN-WIRE
	C821	33U 160V	22U 160V	33U 160V	33U 160V
	R828	7.5K 1/6W	8.2K 1/6W	7.5K 1/6W	7.5K 1/6W
	L803	150-C02F(82U)	TIN-WIRE	150-C02F(82U)	150-C02F(82U)
	C309	0.33U 50V	0.68U 50V	0.33U 50V	0.68U 50V
	C812	22U 100V	47U 100V	22U 100V	47U 100V
	C835	-	1000U 16V	-	-
	L805	-	100U	-	-
	J801	-	TIN SDA 54MM	-	-
CPT PCB ASSY	FR901	1.0 2W	0.68 2W	1.0 2W	1.0 2W
	R990	510 1/6W	470 1/6W	-	-
	R960	360 1/6W	390 1/6W	390 1/6W	390 1/6W
	R969	360 1/6W	390 1/6W	390 1/6W	390 1/6W
	R978	360 1/6W	390 1/6W	390 1/6W	390 1/6W
	R918	30K 1/6W	20K 1/6W	-	-
	R923	240 1/6W	100 1/6W	-	-
	R906	1.1K 1/6W	820 1/6W	-	-
	R933	22 1/6W	62 1/6W	-	-

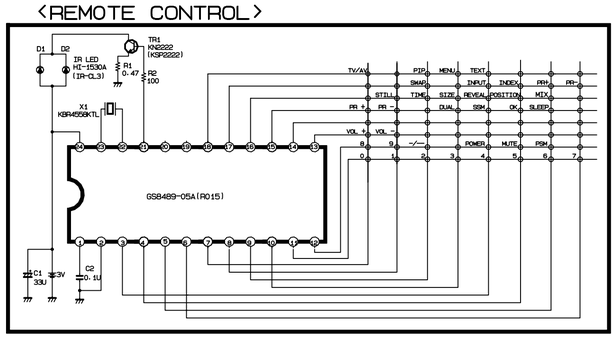

CAT.	REFERENCE NAME	CF29C44/C80/B20	CF-29C60/70	CF-25C44/C80	CF-25C60/C70
CPT PCB ASSY	R997	430 1/6W	470 1/6W	470 1/6W	470 1/6W
PIP PCB ASSY	C73P	100P 50V	100P 50V	100P 50V	100P 50V
	R85P	330 1/6W	330 1/6W	330 1/6W	2.4K 1/6W
CONTROL PCB ASSY	PA01	106-057A	106-057A	106-047C	106-057A

MC-51A CIRCUIT DIAGRAM

VP 484-914C