GoldStar

COLOR TV SERVICE MANUAL

CHASSIS NO. : MC-15A

MODEL : CF-25C10P

CAUTION

BEFORE SERVICING THE CHASSIS, READ THE "SAFETY PRECAUTIONS" IN THIS MANUAL.

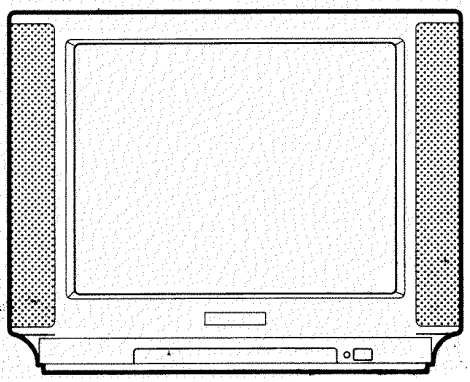

CONTENTS

SPECIFICATIONS

Power Input Rating:	150 watts, AC 230 Volts, 50/60Hz
Receiving TV System:	PAL/SECAM-B/G, NTSC 3.58/4.43 MULTI 26 SYSTEMS
Aerial Input Impedance:	75ohm unbalanced type VHF and UHF
Receiving Channels:	PAL B/G, SECAM B/G system
	Any of VHF channel .....channels 2 to 12
	Any of UHF channels .....channels 21 to 69
	PAL D/K, SECAM D/K system
	Any of VHF channels .....channels 1 to 12
	Any of UHF channels .....channels 21 to 69
	PAL I system
	Any of UHF channels .....channels 21 to 69
	NTSC Standard (US M, JAPAN M) system
	Any of VHF channels .....channels 2 to 13/1 to 12
	Any of UHF channels .....channels 14 to 78/13 to 62
	NTSC 3.58/5.5 System
	NTSC 4.43/5.5 System .....VCR Play Back
	PAL 50/60Hz System
	SECAM 50/60Hz System .....VIDEO DISK Play Back
	NTSC 50/60Hz System
Intermediate Frequencies:	Picture I-F carrier frequency 38.0MHz
	Sound I-F carrier frequency 33.5/32.5/32.0/31.5MHz
Chassis Construction:	IC Solid State, Horizontal Chassis
Picture Tube:	A59KYL220X
Sound Output:	12W X 2Way(MAX.)
Cabinet:	Plastic, Table Top
Dimension:	Height..... 503mm
	Width..... 706mm
	Depth..... 682mm

Features: On-screen display, VIDEO and AUDIO input terminals, Remote Control, PIP

Specifications are subject to change without notice.

SAFETY PRECAUTIONS

IMPORTANT SAFETY NOTICE

Many electrical and mechanical parts in this chassis have special safety-related characteristics. These parts are identified by ⚠ in the Schematic Diagram and Replacement Parts List.
It is essential that these special safety parts should be replaced with the same components as recommended in this manual to prevent X-RADIATION, Shock, Fire, or other Hazards.
Do not modify the original design without permission of manufacturer.

General Guidance

An **Isolation Transformer should always be used** during the servicing of a receiver whose chassis is not isolated from the AC power line. Use a transformer of adequate power rating as this protects the technician from accidents resulting in personal injury from electrical shocks.

It will also protect the receiver and it's components from being damaged by accidental shorts of the circuitary that may be inadvertently introduced during the service operation.

If any fuse (or Fusible Resistor) in this TV receiver is blown, replace it with the specified.

When replacing a high wattage resistor (Oxide Metal Film Resistor, over 1W), keep the resistor 10mm away from PCB.

Keep wires away from high voltage or high temperature parts.

Due to high vacuum and large surface area of picture tube, extreme care should be used in **handling the Picture Tube**. Do not lift the Picture tube by it's Neck.

X-RAY Radiation

Warning:

The source of X-RAY RADIATION in this TV receiver is the High Voltage Section and the Picture Tube.
For continued X-RAY RADIATION protection, the replacement tube must be the same type tube as specified in the Replacement Parts List.

To determine the presence of high voltage, use an accurate high impedance HV meter.

Adjust brightness, color, contrast controls to minimum.
Measure the high voltage.
The meter reading should indicate
23.5 ± 1.5KV: 14-19 inch, 26 ± 1.5KV: 19-21 inch,
29.0 ± 1.5KV: 25-29 inch, 30.0 ± 1.5KV: 32 inch
If the meter indication is out of tolerance, immediate service and correction is required to prevent the possibility of premature component failure.

Before returning the receiver to the customer,

always perform an **AC leakage current check** on the exposed metallic parts of the cabinet, such as antennas, terminals, etc., to be sure the set is safe to operate without damage of electrical shock.

Leakage Current Cold Check(Antenna Cold Check)
With the instrument AC plug removed from AC source, connect an electrical jumper across the two AC plug prongs. Place the AC switch in the on positioin, connect one lead of ohm-meter to the AC plug prongs tied together and touch other ohm-meter lead in turn to each exposed metallic parts such as antenna terminals, phone jacks, etc.
If the exposed metallic part has a return path to the chassis, the measured resistance should be between 1MΩ and 5.2MΩ.
When the exposed metal has no return path to the chassis the reading must be infinite.
An other abnormality exists that must be corrected before the receiver is returned to the customer.

Leakage Current Hot Check (See below Figure)
Plug the AC cord directly into the AC outlet.
Do not use a line Isolation Transformer during this check.
Connect 1.5K/10watt resistor in parallel with a 0.15uF capacitor between a known good earth ground (Water Pipe, Conduit, etc.) and the exposed metallic parts.
Measure the AC voltage across the resistor using AC voltmeter with 1000 ohms/volt or more sensitivity.
Reverse plug the AC cord into the AC outlet and repeat AC voltage measurements for each esposed metallic part. Any voltage measured must not exceed 0.75 volt RMS which is corresponds to 0.5mA.
In case any measurement is out of the limits sepcified, there is possibility of shock hazard and the set must be checked and repaired before it is returned to the customer.

Leakage Current Hot Check circuit

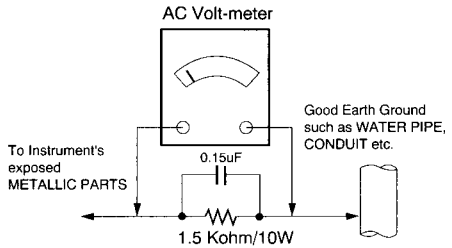

SERVICING PRECAUTIONS

CAUTION: Before servicing receivers covered by this service manual and its supplements and addenda, read and follow the *SAFETY PRECAUTIONS* on page 3 of this publication.
NOTE: If unforeseen circumstances create conflict between the following servicing precautions and any of the safety precautions on page 3 of this publication, always follow the safety precautions. Remember: Safety First.

General Servicing Precautions

1. Always unplug the receiver AC power cord from the AC power source before;
   a. Removing or reinstalling any component, circuit board module or any other receiver assembly.
   b. Disconnecting or reconnecting any receiver electrical plug or other electrical connection.
   c. Connecting a test substitute in parallel with an electrolytic capacitor in the receiver.
   CAUTION: A wrong part substitution or incorrect polarity installation of electrolytic capacitors may result in an explosion hazard.
   d. Discharging the picture tube anode.
2. Test high voltage only by measuring it with an appropriate high voltage meter or other voltage measuring device (DVM, FETVOM, etc) equipped with a suitable high voltage probe. Do not test high voltage by "drawing an arc".
3. Discharge the picture tube anode only by (a) first connecting one end of an insulated clip lead to the degaussing or kine aquadag grounding system shield at the point where the picture tube socket ground lead is connected, and then (b) touch the other end of the insulated clip lead to the picture tube anode button, using an insulating handle to avoid personal contact with high voltage.
4. Do not spray chemicals on or near this receiver or any of its assemblies.
5. Unless specified otherwise in this service manual, clean electrical contacts only by applying the following mixture to the contacts with a pipe cleaner, cotton-tipped stick or comparable nonabrasive applicator; 10% (by volume) Acetone and 90% (by volume) isopropyl alcohol (90%-99% strength)
   CAUTION: This is a flammable mixture.
   Unless specified otherwise in this service manual, lubrication of contacts is not required.
6. Do not defeat any plug/socket B+ voltage interlocks with which receivers covered by this service manual might be equipped.
7. Do not apply AC power to this instrument and/or any of its electrical assemblies unless all solid-state device heat sinks are correctly installed.
8. Always connect the test receiver ground lead to the receiver chassis ground before connecting the test receiver positive lead.
   Always remove the test receiver ground lead last.
9. *Use with this receiver only the test fixtures specified in this service manual.*
   CAUTION: Do not connect the test fixture ground strap to any heatsink in this receiver.

Electrostatically Sensitive (ES) Devices

Some semiconductor (solid state) devices can be damaged easily by static electricity. Such components commonly are called *Electrostatically Sensitive (ES) Devices.* Examples of typical ES devices are integrated circuits and some fieldeffect transistors and semicounductor "chip" components. The following techniques should be used to help reduce the incidence of component damage caused by static electricity.

1. Immediately before handling any semiconductor component or semiconductor-equipped assembly, drain off any electrostatic charge on your body by touching a known earth ground. Alternatively, obtain and wear a commercially available discharging wrist strap device, which should be removed to prevent potential shock reasons prior to applying power to the unit under test.
2. After removing an electrical assembly equipped with ES devices, place the assembly on a conductive surface such as aluminium foil, to prevent electrostatic charge buildup or exposure of the assembly.
3. Use only a grounded-tip soldering iron to solder or unsolder ES devices.
4. Use only an anti-static type solder removal device. Some solder removal devices not classified as "anti-static" can generate electrical charges sufficient to damage ES devices.
5. Do not use freon-propelled chemicals. These can generate electrical charges sufficient to damage ES devices.
6. Do not remove a replacement ES device from its protective package until immediately before you are ready to install it. (Most replacement ES devices are packaged with leads electrically shorted together by conductive foam, aluminium foil or comparable conductive material).
7. Immediately before removing the protective material from the leads of a replacement ES device, touch the protective material to the chassis or circuit assembly into which the device will be installed.
   CAUTION: Be sure no power is applied to the chassis or circuit, and observe all other safety precautions.
8. Minimize bodily motions when handling unpackaged replacement ES devices. (Otherwise harmless motion such as the bruching together of your clothes fabric or the lifting of your foot from a carpeted floor can generate static electricity sufficient to damage an ES device.)

General Soldering Guidelines

1. Use a grounded-tip, low-wattage soldering iron and appropriate tip size and shape that will maintain tip temperature within the range or 500°F to 600°F.
2. Use an appropriate gauge of RMA resin-core solder composed of 60 parts tin/40 parts lead.
3. Keep the soldering iron tip clean and well tinned.
4. Thoroughly clean the surfaces to be soldered. Use a mall wirebristle (0.5 inch, or 1.25cm) brush with a metal handle. Do not use freon-propelled spray-on cleaners.
5. Use the following unsoldering technique
   a. Allow the soldering iron tip to reach normal temperature. (500°F to 600°F)
   b. Heat the component lead until the solder melts.
   c. Quickly draw the melted solder with an anti-static, suction-type solder removal device or with solder braid.
   CAUTION: Work quickly to avoid overheating the circuitboard printed foil.
6. Use the following soldering technique.
   a. Allow the soldering iron tip to reach a normal temperature (500°F to 600°F)
   b. First, hold the soldering iron tip and solder the strand against the component lead until the solder melts.
   c. Quickly move the soldering iron tip to the junction of the component lead and the printed circuit foil, and hold it there only until the solder flows onto and around both the component lead and the foil.
   CAUTION: Work quickly to avoid overheating the circuit board printed foil.
   d. Closely inspect the solder area and remove any excess or splashed solder with a small wire-bristle brush.

IC Remove/Replacement

Some chassis circuit boards have slotted holes (oblong) through which the IC leads are inserted and then bent flat against the circuit foil. When holes are the slotted type, the following technique should be used to remove and replace the IC. When working with boards using the familiar round hole, use the standard technique as outlined in paragraphs 5 and 6 above.

Removal

1. Desolder and straighten each IC lead in one operation by gently prying up on the lead with the soldering iron tip as the solder melts.
2. Draw away the melted solder with an anti-static suction-type solder removal device (or with solder braid) before removing the IC.

Replacement

1. Carefully insert the replacement IC in the circuit board.
2. Carefully bend each IC lead against the circuit foil pad and solder it.
3. Clean the soldered areas with a small wire-bristle brush. (It is not necessary to reapply acrylic coating to the areas).

"Small-Signal" Discrete Transistor Removal/Replacement

1. Remove the defective transistor by clipping its leads as close as possible to the component body.
2. Bend into a "U" shape the end of each of three leads remaining on the circuit board.
3. Bend into a "U" shape the replacement transistor leads.
4. Connect the replacement transistor leads to the corresponding leads extending from the circuit board and crimp the "U" with long nose pliers to insure metal to metal contact then solder each connection.

Power Output, Transistor Device Removal/Replacement

1. Heat and remove all solder from around the transistor leads.
2. Remove the heatsink mounting screw (if so equipped).
3. Carefully remove the transistor from the heat sink of the circuit board.
4. Insert new transistor in the circuit board.
5. Solder each transistor lead, and clip off excess lead.
6. Replace heatsink.

Diode Removal/Replacement

1. Remove defective diode by clipping its leads as close as possible to diode body.
2. Bend the two remaining leads perpendiculaly to the circuit board.
3. Observing diode polarity, wrap each lead of the new diode around the corresponding lead on the circuit board.
4. Securely crimp each connection and solder it.
5. Inspect (on the circuit board copper side) the solder joints of the two "original" leads. If they are not shiny, reheat them and if necessary, apply additional solder.

Fuse and Conventional Resistor Removal/Replacement

1. Clip each fuse or resistor lead at top of the circuit board hollow stake.
2. Securely crimp the leads of replacement component around notch at stake top.
3. Solder the connections.
   CAUTION: Maintain original spacing between the replaced component and adjacent components and the circuit board to prevent excessive component temperatures.

Circuit Board Foil Repair

Excessive heat applied to the copper foil of any printed circuit board will weaken the adhesive that bonds the foil to the circuit board causing the foil to separate from or "lift-off" the board. The following guidelines and procedures should be followed whenever this condition is encountered.

At IC Connections

To repair a defective copper pattern at IC connections use the following procedure to install a jumper wire on the copper pattern side of the circuit board. (Use this technique only on IC connections).

1. Carefully remove the damaged copper pattern with a sharp knife. (Remove only as much copper as absolutely necessary).
2. carefully scratch away the solder resist and acrylic coating (if used) from the end of the remaining copper pattern.
3. Bend a small "U" in one end of a small gauge jumper wire and carefully crimp it around the IC pin. Solder the IC connection.
4. Route the jumper wire along the path of the out-away copper pattern and let it overlap the previously scraped end of the good copper pattern. Solder the overlapped area and clip off any excess jumper wire.

At Other Connections

Use the following technique to repair the defective copper pattern at connections other than IC Pins. This technique involves the installation of a jumper wire on the component side of the circuit board.

1. Remove the defective copper pattern with a sharp knife. Remove at least 1/4 inch of copper, to ensure that a hazardous condition will not exist if the jumper wire opens.
2. Trace along the copper pattern from both sides of the pattern break and locate the nearest component that is directly connected to the affected copper pattern.
3. Connect insulated 20-gauge jumper wire from the lead of the nearest component on one side of the pattern break to the lead of the nearest component on the other side. Carefully crimp and solder the connections.
   CAUTION: Be sure the insulated jumper wire is dressed so that it does not touch components or sharp edges.

CONTROLS LOCATION

FRONT

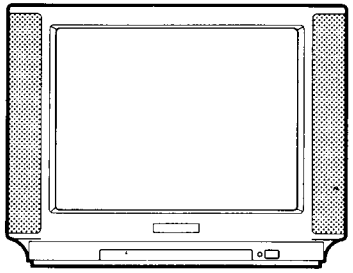

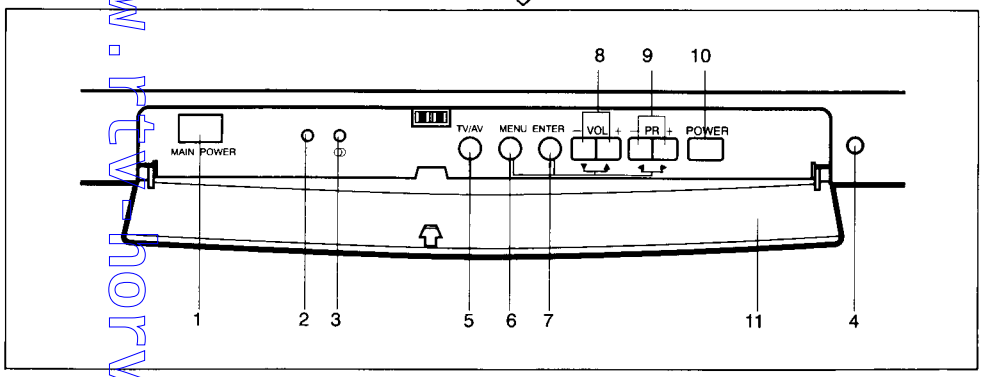

1. MAIN POWER BUTTON
2. STAND-BY INDICATOR
3. SOUND EFFECT (PSEUDO) INDICATOR
4. REMOTE CONTROL SENSOR
5. TV/AV MODE SELECTION BUTTON
6. MENU BUTTON
7. ENTER BUTTON
8. VOLUME UP/DOWN & UPPER/LOWER MODE BUTTONS
9. PROGRAM UP/DOWN & LEVEL UP/DOWN BUTTONS
10. SUB-POWER BUTTON
11. PANEL DOOR

BACK

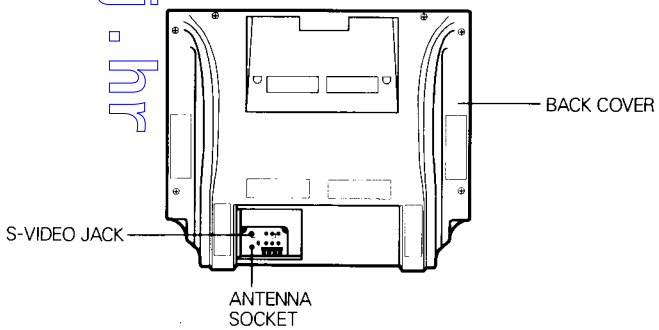

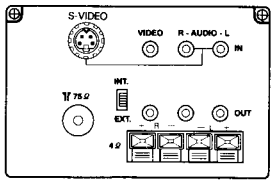

DISASSEMBLY INSTRUCTIONS

BACK CABINET REMOVAL

Remove 10 screws residing on the back cabinet and carefully separate the back cabinet from the front cabinet.

MAIN CHASSIS REMOVAL

Grasp both sides of the main chassis, pull it backward smoothly.

SPEAKER ASSY REMOVAL

1. Remove P604 and P606 connectors between the speaker and the main chassis.
2. To remove the speaker, pull out the speaker supporter from the front cabinet.

CPT REMOVAL

1. Pull out the CPT board from the CPT neck.
2. Place the front cabinet on soft material so as not to mar the front surface or damage control knobs.
3. Remove 4 nuts securing the picture tube mounting brackets to the front cabinet.
4. Carefully separate CPT from the front cabinet.

PICTURE TUBE HANDLING CAUTION

Due to high vacuum and large surface area of picture tube, great care must be exercised when handling picture tube.
Always lift picture tube by grasping it firmly around face-plate.
NEVER LIFT TUBE BY ITS NECK. The picture tube must not be scratched or subjected to excessive pressure as fracture of glass may result in an implosion of considerable violence which can cause personal injury or property damage.

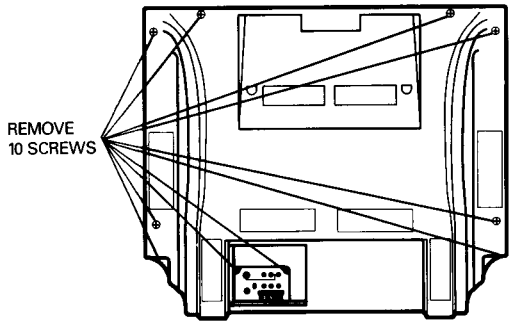

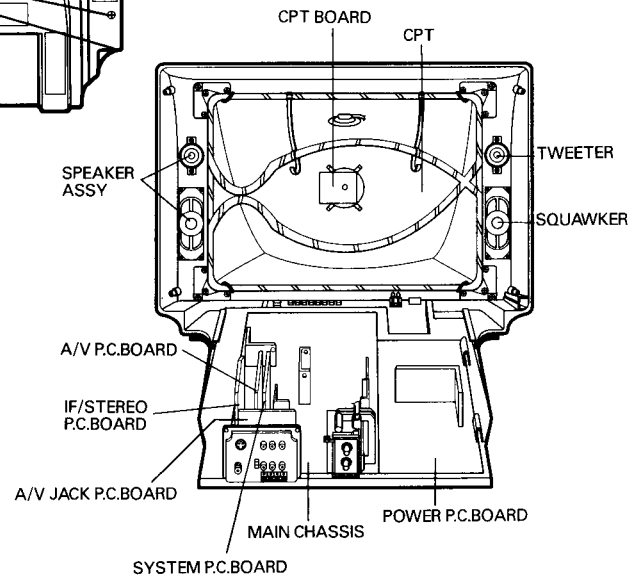

ADJUSTMENT INSTRUCTIONS

1.APPLICATION

This instruction is applicable to all models using the MC-15A chassis.

2. SPECIFICATION

(1) CIRCUMFERENCE CONDITION

If there is no particular guidance, adjust the MC-15A chassis on the following conditions.
Circumference Temperature : 20°C ± 5°C
Relative Humidity : 65% ± 5%

(2) NECESSARY INSTRUMENTS

1) PIF/SIF Board Alignment Instruments

- Sweep Generator and Marker Unit
- Plug In Unit (450-U82)
- Alignment Scope (5121A)
- AM-FM Sig. Generator (MSG-274E)
- DC Power Supplier (0-20V, 1A DC): 2EA
- Digital Multimeter: 1EA
- Detector 1 set
- Capacitor: Ceramic, 0.01uF/50V, 2EA
- Resistor: 3.3K(1/8W) 1EA, 4.7K(1/8W) 1EA, 1K(1/8W)) 2EA, 10K(1/8W) 2EA
- Transistor: KTC1815-Y, 1EA
- Switch: Button SW, 1EA

2) System Converter Board Alignment Instruments

- DC Power Supplier (0-20V, 1A DC): 1EA
- Oscilloscope: 1EA
- Digital Multimeter: 1EA
- FM-AM Signal Generator (MSG-274E)
- Resistor: 10KΩ (1/8W) 1EA
- Coupling Condenser : 0.01μ F/50V Ceramic Condenser, 2EA

3) Main Board Alignment Instruments

- Color Signal Generator (PAL/SECAM)
- Oscilloscope
- Digital Multimeter
- TV-Color Analyzer (TV-2130: Minoltameter): 1EA

4) X-RAY Protector Circuit Operating Test Instruments

- DC Power Supplier (0-20V, 1A): 1EA

(3) SIGNAL

If there is no particular guidance, use the standard color signal (PM5514 Digital Signal) with 70dBu-80dBu.

(4) POWER SOURCE

AC220V ± 20%(50/60Hz)

3. ADJUSTMENT

3-1. PIF TRAP ADJUSTMENT

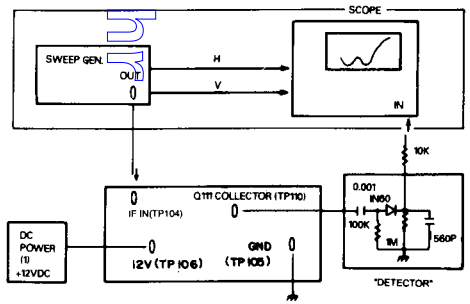

Figure 1. Connection Diagram of Equipment

(1) Connect as shown in figure 1 and supply with power source (TP109: GND)
(2) Adjust L119 so that 33.5MHz marker (P-4.5MHz) point may be minimum.
(3) Adjust L118 so that 32.0MHz marker (P-6.0MHz) point may be minimum.
(Marker Frequency: 32.0, 33.5MHz)

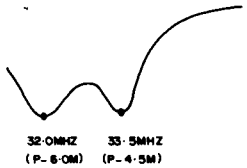

Figure 2

3-2. PIF/SIF ADJUSTMENT

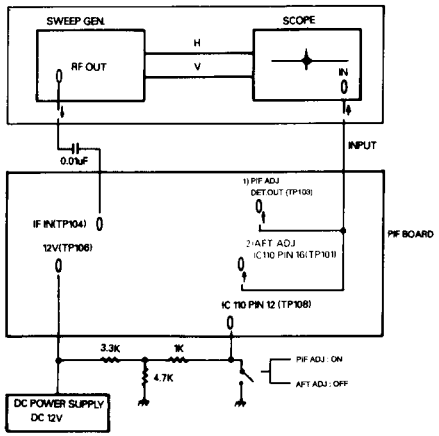

Figure 3. PIF and AFT Adjustment

1) PIF Adjustment

(1) Connect as shown in figure 3, and then DC power supplies on.
(2) Adjust the Gain Control Knob of Alignment Scope so that Beat Output may become proper as shown in figure 4.
(3) Adjust L115 so that Beat Waveform and Marker point (38.0MHz) may be on the same location as shown in figure 4.

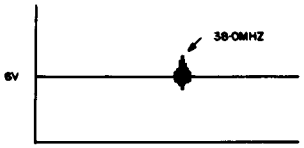

Figure 4

2) AFT Adjustment

(1) After finishing PIF adjustment, move input terminal of Scope to the pin 16 of IC110.
(2) Adjust the Gain Control Knob to be proper.
(3) Adjust L117 so that the scope waveform should be as shown in figure 5.

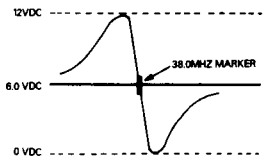

Figure 5

3) SIF Adjustment

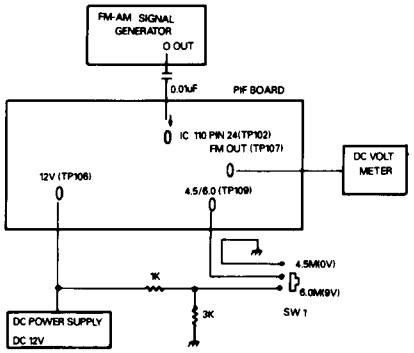

Figure 6

(1) 6.0 MHz ADJUSTMENT

- Connect the 6.0MHz signal of FM-AM Signal Generator to pin 24 of IC110 through a condenser 0.01uF. (Modulation: 400Hz/50KHz deviation 100dBu)
- SW1 sets in 6.0MHz.
- Connect the DC voltmeter to FM OUT (TP107)
- Adjust L113 so that the reading on the DC voltmeter may become DC5.5 ± 0.2V.

(2) 4.5MHz ADJUSTMENT

- SW1 sets in 4.5MHz.
- Connect the 4.5MHz signal of SIF IN to pin24 of IC110 (SIF IN Terminal) (Modulation: 400Hz/25KHz deviation 100dBu)
- Connect the DC voltmeter to FM OUT (TP107)
- Adjust VC110 so that the reading on the DC voltmeter may become DC 5.5 ± 0.5V.

3-3. SYSTEM CONVERTER BOARD ADJUSTMENT

1) 6.0MHz SIF OSC. Coil(L151) Adjustment

(1) Supply +12V to the System Converter Board (TP151).
(2) Connect a 10KΩ resistor between pin 18 and 19 of IC151.
(3) Apply the 6.0MHz signal (No modulation, 100dBu) of FM-AM Signal Generator output to Base of Q156 (TP152) through a condenser 0.01uF.
(4) Connect oscilloscope to pin 9 of IC151 (TP153).
(5) Adjust L151 so that the response on oscilloscope can be maximum.
(6) Remove the 10KΩ resistor between pin 18 and 19 after finishing adjustment.

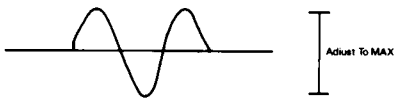

Figure 7

2)5.5MHz SIF OSC. Coil (L152) Adjustment

(1) Supply +12VDC to the System Converter Board (TP151).
(2) Supply +12VDC VB terminal (TP154) through a 10K ohm resistor.
(3) Apply the 5.5MHz signal (No modulation, 100dBu) of FM-AM Signal Generator Output to the position which Z157 output and C157 meet at (TP155).
(4) Connect DC voltmeter to pin 18 of IC151 (TP156).
(5) Adjust L152 so that the response on DC voltmeter may become 4.5±0.2VDC.

3-4. +B VOLT POWER SUPPLY ADJUSTMENT (VR801).

● Regulated B+ Adjustment
NOTE: This adjustment should be performed after warming up for 10 minutes.

Test Point	: TP801 (B+ on MAIN)
Adjust	: VR801

1) Tune the TV set to receive a broadcast signal.
2) Set Contrast 80%, Brightness 65%, Contrast 50%, (APC condition)
3) Connect DC voltmeter to a TP801.
4) Adjust VR801 for 154V ± 0.2Vdc. (28 inch)
120V ± 0.2Vdc. (25 inch)
123V ± 0.2Vdc. (29 inch)

Ref.) In case of using the CPT (A68KYN680X, Super Flat) and FBT (P/No : 154-279D), adjust for 115V±0.2Vdc. (25/29 inch)

3-5. VERTICAL HEIGHT ADJUSTMENT (VR301)

(1) Receive the standard PAL color signal; (CH5 digital pattern).
(2) Set the Contrast 80%, and Brightness 65%, Colour 50%.
(3) Adjust VR301 so that the circle may be reached at position of 4 ±1mm distance from top and bottom of the effective screen.

3-6. VERTICAL CENTER ADJUSTMENT (SW301)

(1) Receive the standard color signal.
(2) Adjust the SW301 so that the electrical center of the picture may get to concur with the center of a mechanical center of CPT screen vertically.

3-7. HORIZONTAL CENTER ADJUSTMENT (VR401)

(1) Receive the standard PAL color signal.
(2) Adjust the VR401 so that the electrical center of the picture may get to concur with the center of a mechanical center of CPT screen horizontally.

3-8. RF AGC ADJUSTMENT (VR110)

(1) Receive the standard PAL color signal. (60dBu ±1dBu)
(2) Connect the Digital-Multimeter to TP101 (PCB Main).
(3) Adjust VR110 so that maybe 4.8±0.1VDC.

3-9. FOCUS ADJUSTMENT

(1) Receive the standard PAL color signal.
(2) Adjust the FOCUS V/R of FBT for well defined vertical scanning lines in the center area of the screen.

3-10. BELL FILTER COIL (L503) ADJUSTMENT

(1) Receive SECAM color bar signal. (60-80dBu).
(2) Adjust the above signal so that Contrast may be 80%, Brightness 65% and Color 50%.
(3) Connect the scope to pin 18 of IC501 (TP504).
(4) Adjust L503 for the flat level of amplitude in each color bar waveform on the scope. (See figure 8)

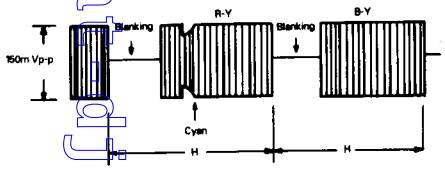

Figure 8

3-11. SECAM IDENT COIL (L504) ADJUSTMENT

(1) Receive the standard SECAM color bar signal (60-80dBu).
(2) Connect the Digital Voltmeter to pin 23 of IC501 (TP505).
(3) Adjust L504 so that the reading on the DC voltmeter may become 8.5 ± 0.1VDC.
(4) In case of Line Ident Mode, adjust it to be 7.0 ± 0.1VDC. (R525:open)

3-12. SECAM (B-Y, R-Y) DISCRIMINATOR COIL (L500,L501) ADJUSTMENT

(1) Receive the standard SECAM color bar signal (Leave the contrast and brightness, color controls free)
(2) Connect the scope to TP501 (pin 62 of IC501)
(3) Adjust L500 so that the white level in picture part may get to concur with the vertical retrace line (See figure 9)

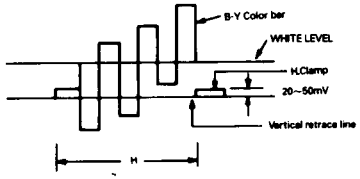

Figure 9

(4) Connect the scope to TP502 (pin 60 of IC501).
(5) Adjust L501 so that the white level in picture part may reach to the vertical retrace line (See figure 10.)

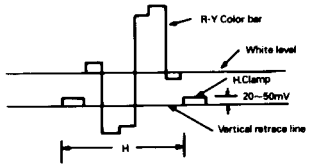

Figure 10

3-13. PAL MATRIX ADJUSTMENT (L512, VR501)

(1) Receive the DEM. signal of the standard PAL.
(2) Connect the Oscilloscope probe to TP503.
(3) Adjust VR501 so that the LINE 1 and the LINE 2 may be on the same level (See figure 11)
(4) Adjust L512 to minimize the venetian blind (Approx: 600-650m Vp-p)
(5) If venetian blind appears after this adjustment, repeat above STEP 3 and 4.

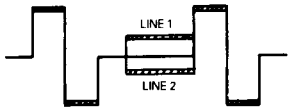

Before Adjustment

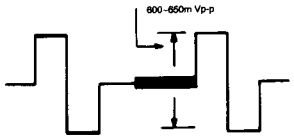

After Adjustment
Figure 11

3-14. SCREEN AND WHITE BALANCE ADJUSTMENT

(1) Set the VR911, 912, 922, 931, 932 on the CPT Board and SUB-Bright (VR503) on MAIN PCB to the mechanical center position.
(2) Set the color volume to the MIN.
(3) After a normal operation do this adjustment in the preheated state for above 15 minutes at least.
(4) Receive the DEM signal of the standard PAL (color-less pattern of philips GEN)
(5) Set the service SW(SW302) to stop the vertical oscillation (That is, to obtain horizontal line).
(6) Turn the screen VR counterclockwise and set it to the minimum position.
(7) Turn the screen VR clockwise slowly to obtain a horizontal line on screen.
(8) Adjust the CUT-OFF VR(VR912, 922, 932) so that the horizontal line on screen may become white except the colour appearing on the horizontal line.
(9) Turn the screen VR counterclockwise to obtain a horizontal line on screen.
(10) Set SW302 to the normal position.
(11) Set the Contrast, Brightness VR to be maximum.
(12) Adjust VR911 and VR931 on the CPT Board so as to obtain the white screen in the high light areas (color temperature 10000° ± 800° K)
(As using minoltameter (TV-2130), adjust it to be X=281 ±8, Y=288 ± 8)
(13) Adjust Contrast and Brightness and then conform whether you have a good adjustment in a high and low light part.
(14) Otherwise, re-adjust above item 5-13.

3-15. SUB-BRIGHTNESS ADJUSTMENT (VR503)

(1) This adjustment must be done after white balance adjustment.
(2) Operate the receiver and receive the Standard PAL pattern signal.
(3) Set the Contrast (80%) and Brightness (65%), Color (50%).
(4) Adjust VR503 until just before so that the screen may become CUT-OFF.

3-16. HORIZONTAL DIRECTION ADJUSTMENT OF ON-SCREEN LETTER

(1) Receive the standard color signal.
(2) Push the RECALL Key on the remote control unit.
(3) Adjust L1 so that the locations of the level bar can keep the same distance right and left each.

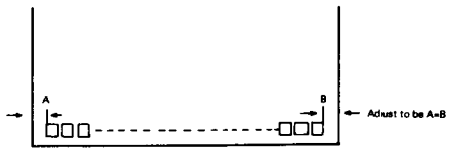

3-17. PIP(Picture in Picture) BOARD ADJUSTMENT

This adjustment is applicable to the model with PIP BOARD and must be done after TV receiver adjustment.

1.CONNECTION

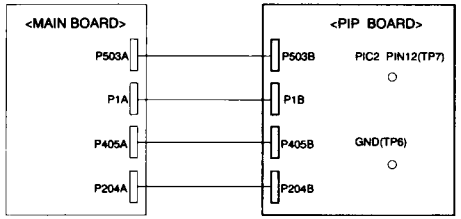

Figure 12

2.HORIZONTAL-SYNC. ADJUSTMENT

(1) Connect each pin as shown in figure 12 and supply power source to the TV receiver.
(2) Make the antenna terminal not receive any signal.
(3) Push the "ON/OFF" key on the remote control unit which is called with PIP POWER BUTTON.
(4) Connect pin 12(TP7) of PIC2 to the ground(TP6).
(5) Connect the frequency counter (FC-7102, GOLD-STAR) to pin4(TP8) of PIC2.
(6) Adjust PVR1(H-SYNC.) so that the horizontal frequency may be 15680±15HZ.
(7) Disconnect pin12(TP7) of PIC2 from the ground.

3-17-1. PIP PAL COLOR SYNC. (8.86MHZ) ADJUSTMENT USING PVC2

(1) Connect each pin as shown in figure 12 and supply the power source to the TV receiver.
(2) Supply the PAL COLOR BAR signal to the antenna terminal.
(3) Push the "ON/OFF" key on the remote control unit.
(4) Adjust a variable capacitor PVC2 slowly so that color may appear on the screen of the TV receiver.
(5) Connect pin 17(TP2) of PIC7 to the ground(TP1).
(6) Adjust a variable capacitor PVC2 so that the color may not flow.
(7) Disconnect the pin 17(TP2) of PIC7 from ground.

3-17-2. PIP NTSC COLOR SYNC. (7.15900MHz) ADJUSTMENT USING PVC1

(1) Connect each pin as shown in figure 12 and supply power source to the TV receiver.
(2) Supply the NTSC COLOR BAR signal to the antenna terminal.
(3) Push the "ON/OFF" key on the remote control unit.
(4) Adjust a variable capacitor PVC1 slowly so that color may appear on the screen of the TV receiver.
(5) Connect pin 17(TP2) of PIC7 to the ground(TP1).
(6) Adjust a variable capacitor PVC1 so that the color may not flow.
(7) Disconnect the pin 17(TP2) of PIC7 from ground.

3-17-3. PIP SECAM BELL FILTER ADJUSTMENT USING PL9

1.CONNECTION

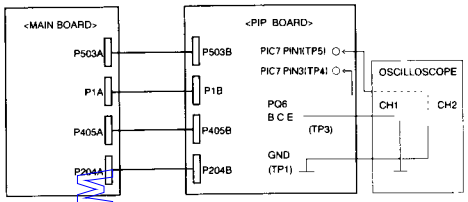

Figure 13

(1) Connect each pin as shown in figure 13 and supply power source to the TV receiver.
(2) Supply the SECAM COLOR BAR signal to the antenna terminal.
(3) Push the "ON/OFF" key on the remote control unit.
(4) Adjust PL9 so that the amplitude of the difference signal may be flat during two line scanning period closed as shown in figure 14.

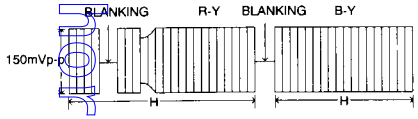

Figure 14

3-17-4. SECAM (B-Y, R-Y) DISCRIMINATION ADJUSTMENT USING PVR2 AND PL10

(1) Connect each pin as shown in figure 13.
(2) Connect CH1 to pin 3 of PIC7(TP4) and CH2 to pin 1(TP5), and then supply the power source to the TV receiver.
(3) Push the "ON/OFF" key on the remote control unit.
(4) Adjust PVR2(R-Y)and PL10(B-Y) so that the white level of the picture parts(R-Y and B-Y) may be equal to the vertical retrace line.

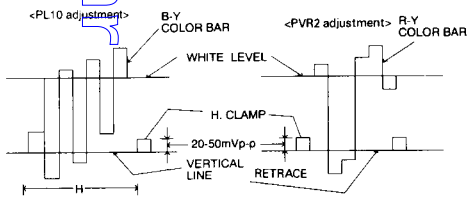

Figure 15

3-18. APC ADJUSTMENT

(1) Push the "APC" key on the remote control unit so that the contrast may be 80%, brightness may be 65% and color may be 50%.
(2) EEPROM OPTION ADJUSTMENT
1. Push the "APC" key on the remote control unit.
2. Push the "ADDRESS" key referring to the below table.
* TABLE

OPTION CONTENT	DIRECT ADDRESS ON TX
LOGO( ), VOLUME UP/DOWN( ), NO SIGNAL-SOUND( )	1
LOGO( ), VOLUME UP/DOWN( ), NO SIGNAL-SOUND(×)	2
LOGO( ), VOLUME UP/DOWN(×), NO SIGNAL-SOUND( )	3
LOGO( ), VOLUME UP/DOWN(×), NO SIGNAL-SOUND(×)	4
LOGO(×), VOLUME UP/DOWN( ), NO SIGNAL-SOUND( )	5
LOGO(×), VOLUME UP/DOWN( ), NO SIGNAL-SOUND(×)	6
LOGO(×), VOLUME UP/DOWN(×), NO SIGNAL-SOUND( )	7
LOGO(×), VOLUME UP/DOWN(×), NO SIGNAL-SOUND(×)	8

3. Push the "ENTER" key or "▶" key on the remote control unit.

PURITY AND CONVERGENCE ADJUSTMENT

CAUTION: Convergence and Purity have been factory aligned. Do not attempt to tamper with these alignments. However, the effects of adjacent receiver components, or replacement of picture tube or deflection yoke may require the need to readjust purity and convergence. Convergence magnet assembly and rubber wedges need mechanical positioning following the figure 16. Before attempting any convergence adjustments this receiver should be operated for at least fifteen minutes. If adjustment is required the adjustments should be made in the following sequence.

COLOUR PURITY ADJUSTMENT

1. Demagnetize the picture tube and cabinet using a degaussing coil.
2. Turn the CONTRAST and BRIGHTNESS controls to maximum.
3. Select the purity pattern consisted of green only on the pattern generator.
4. Loosen the clamp screw holding the yoke, and slide the yoke backward to provide vertical green belt (zone) in the picture screen.
5. Remove the Rubber Wedges.
6. Rotate and spread the tabs of the purity magnet (See figure 17) around the neck of the picture tube until the green belt is in the center of the screen. At the same time, center the raster vertically.
7. Move the yoke slowly forward or backward until a uniform green screen is obtained. Tighten the clamp screw of the yoke temporarily.
8. Check purity of the red and blue rasters by selecting the purity pattern of pattern generator.
9. Obtain a white raster, referring to "WHITE BALANCE ADJUSTMENT".
10. Proceed with convergence adjustment.

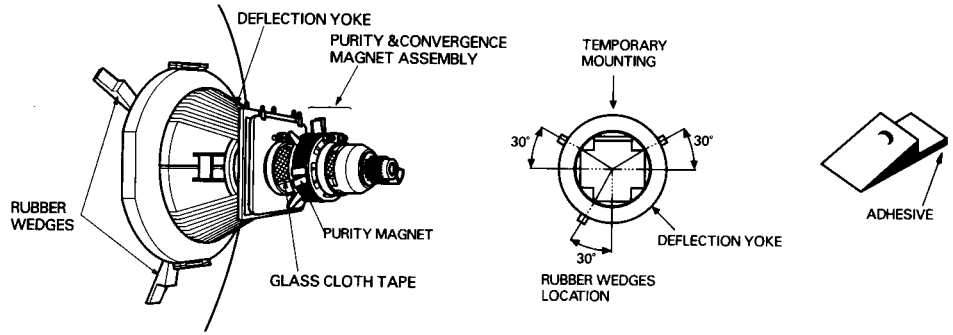

Figure 16

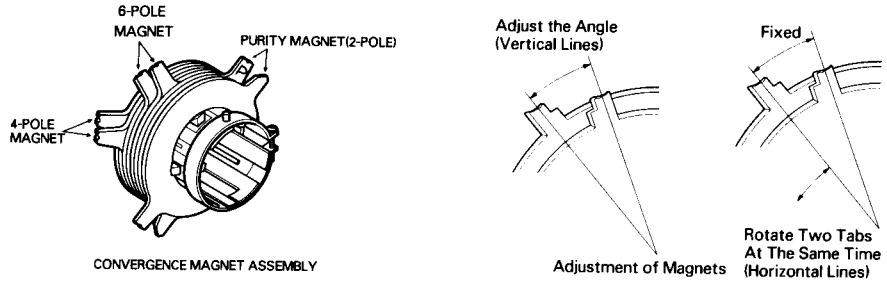

Figure 17

CENTER CONVERGENCE ADJUSTMENT

1. Receive crosshatch pattern with a colour bar signal generator.
2. Adjust the BRIGHTNESS and CONTRAST controls for well defined pattern.
3. Adjust two tabs of the 4-pole magnets to change the angle between them (See figure 17) and superimpose the red and blue vertical lines in the center area of the picture screen. (See figure 18)
4. Turn both tabs at the same time keeping their angles constant to superimpose red and blue horizontal lines at the center of the screen. (See figure 18)
5. Adjust two tabs of 6-pole magnets to superimpose red/blue line with green one. Adjusting the angle affects the vertical lines and rotating both magnets affects the horizontal lines.
6. Repeat adjustments 1,2,3, keeping in mind red, green and blue movements, because 4-Pole magnets and 6-Pole magnets interact and make dot movement complex.

CIRCUMFERENCE CONVERGENCE ADJUSTMENT

1. Loosen the clamping screw of DY to allow the yoke to tilt.
2. Adjust DY to obtain a better convergence in the circumference by orbital movement of the front of the yoke, then secure the DY in appropriate position by placing the placing the wedges as illustrates in figure 18. Tighten screw holding the DY. Stick 3 adhesive tapes on wedges as shown in figure 16.

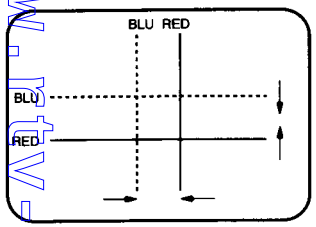

4-Pole Magnets Movement

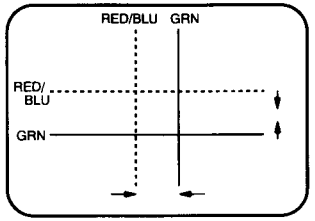

6-Pole Magnets Movement

Center Convergence by Convergence Magnets

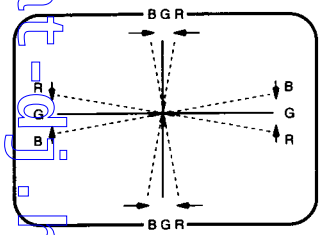

Incline the Yoke up (or down)

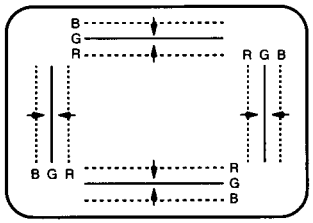

Incline the Yoke right (or left)

Circumference Convergence by Deflection Yoke

Figure 18. DOT MOVEMENT PATTERN

TROUBLESHOOTING GUIDE

1. DEAD SET (NO RASTER/NO SOUND)

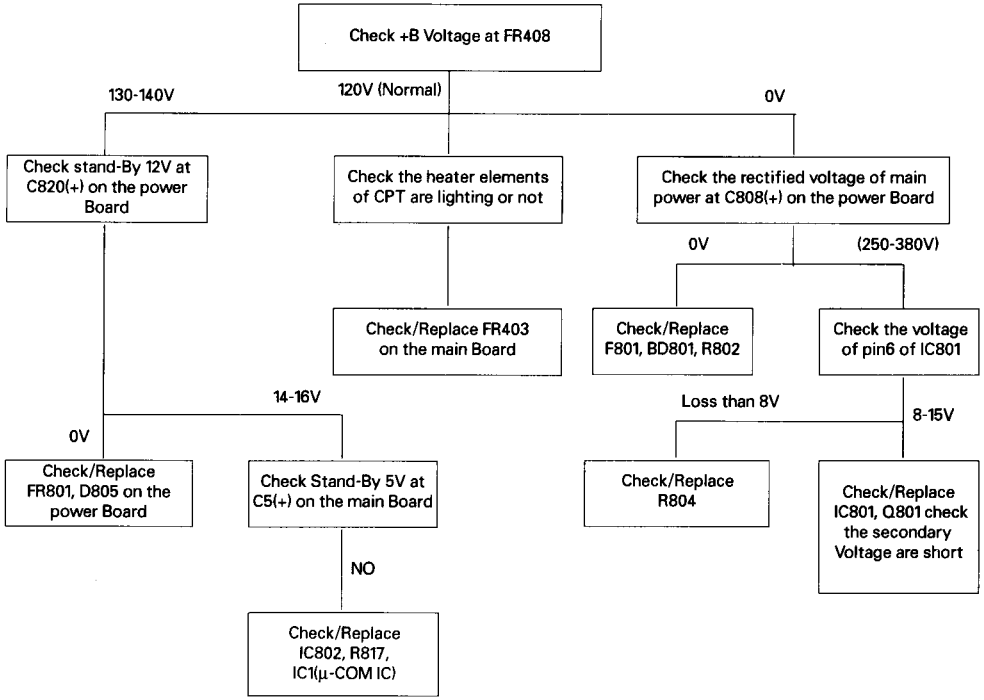

2. NO SOUND, NO PICTURE (RASTER OK)

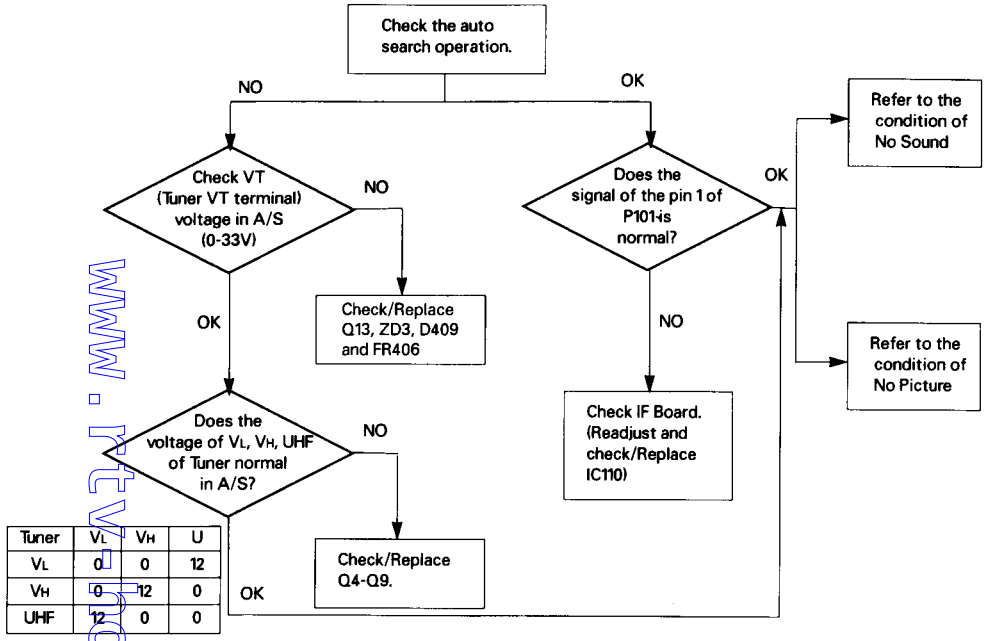

Tuner	VL	VH	U
VL	0	0	12
VH	0	12	0
UHF	12	0	0

3. NO PICTURE

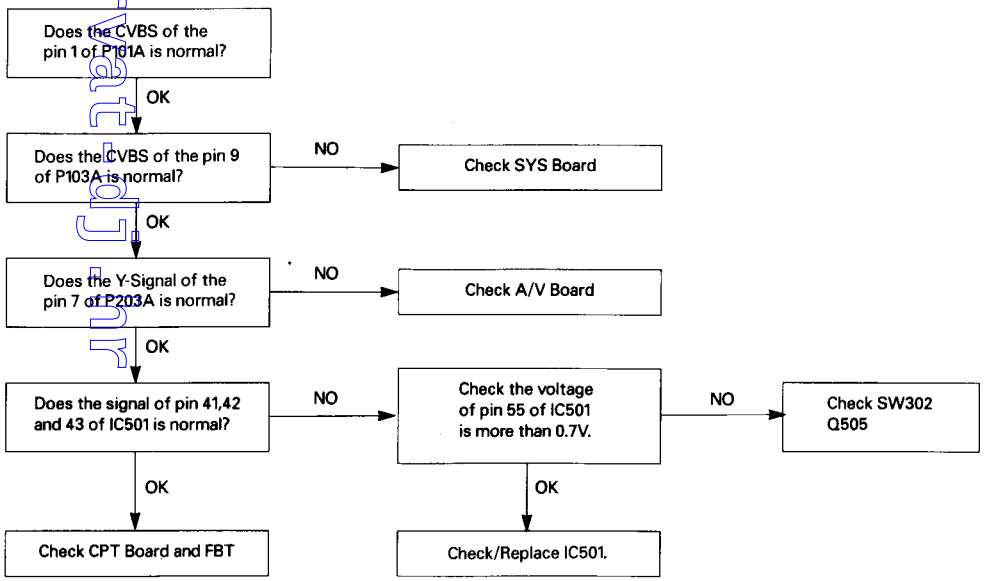

4. NO SOUND

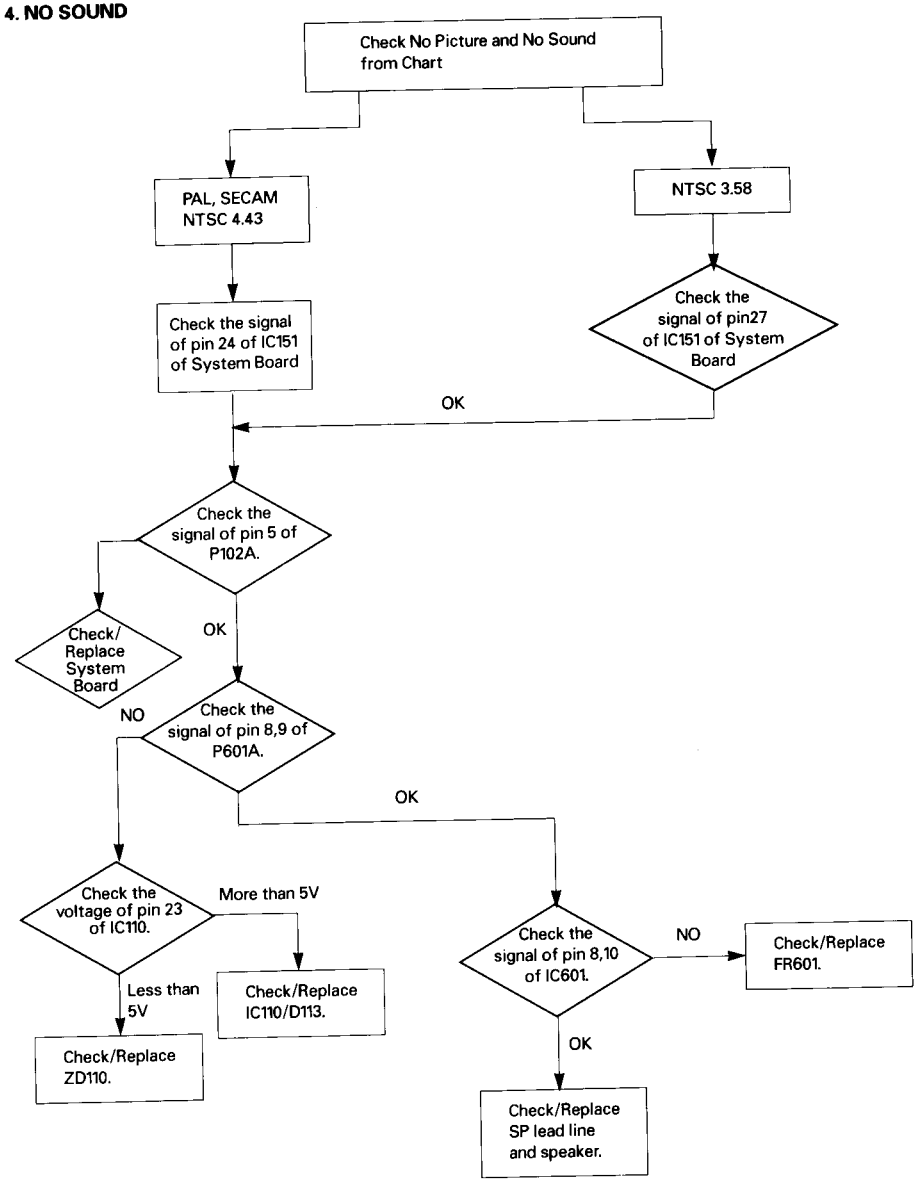

5. NO RASTER (SOUND OK)

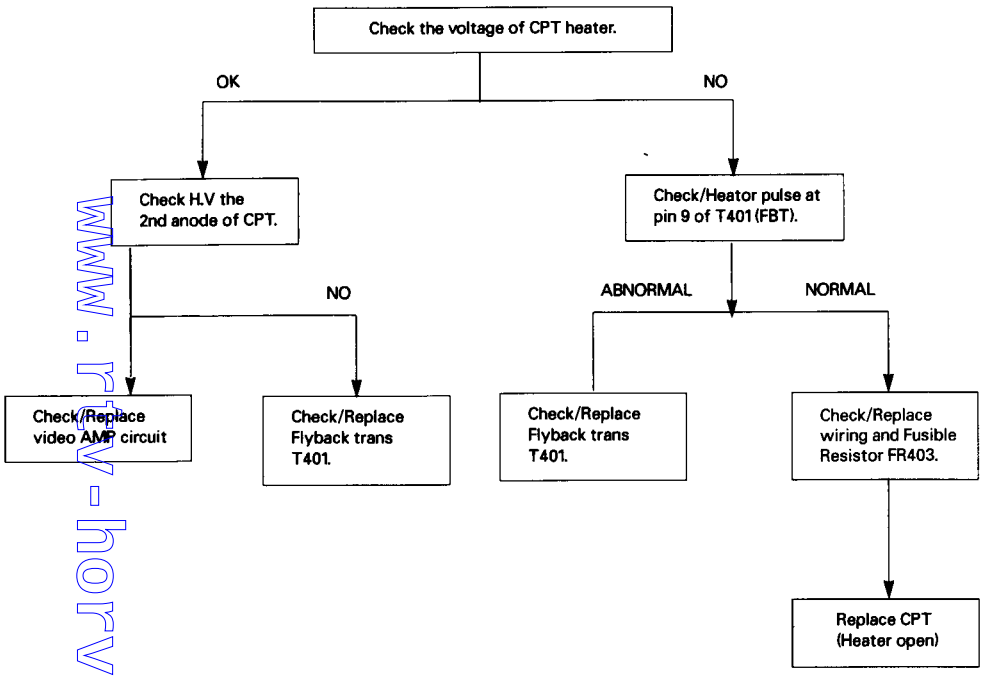

6. CHANNEL SELECTOR TROUBLE (CHART 1)

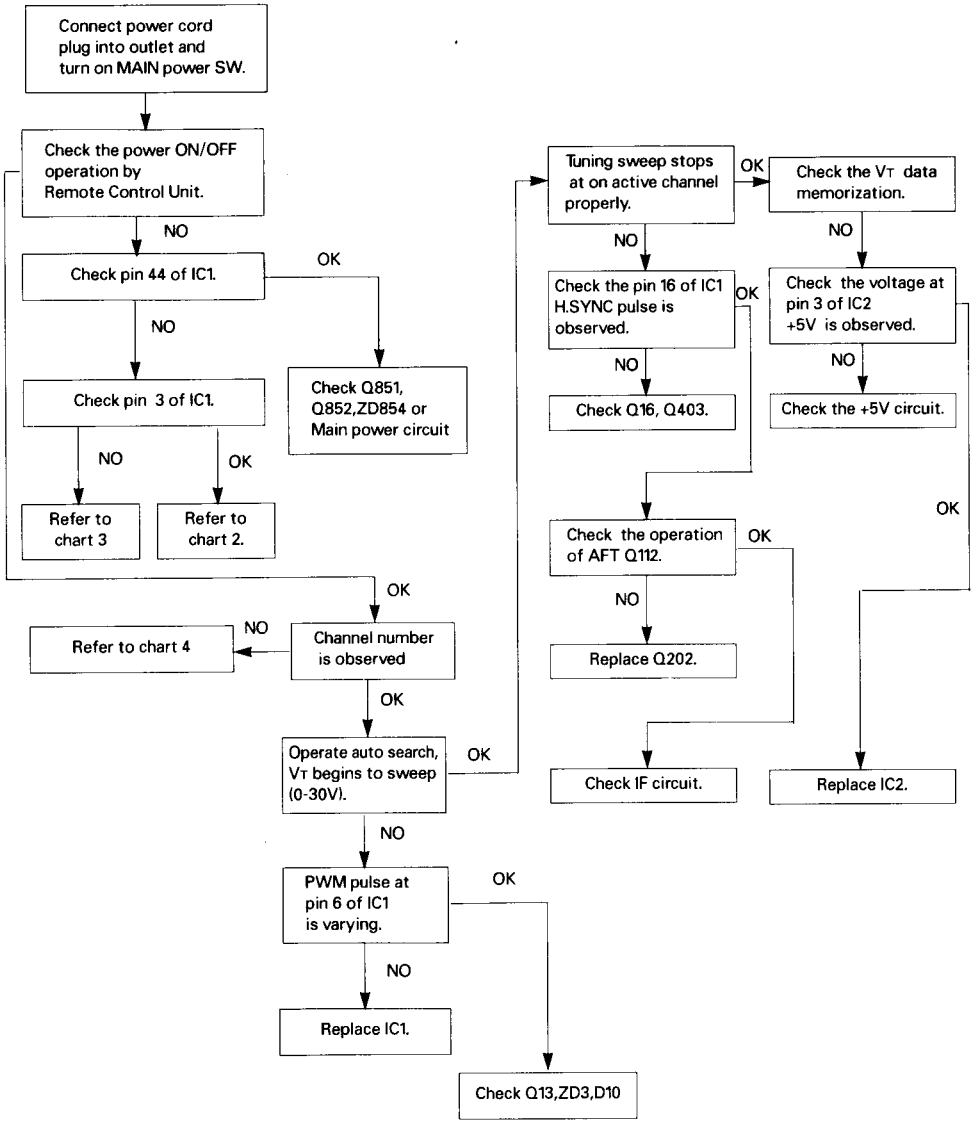

Microcomputer (IC01) Operation Check (CHART 2)
For Checking Microcomputer check that control buttons and their connection work properly.

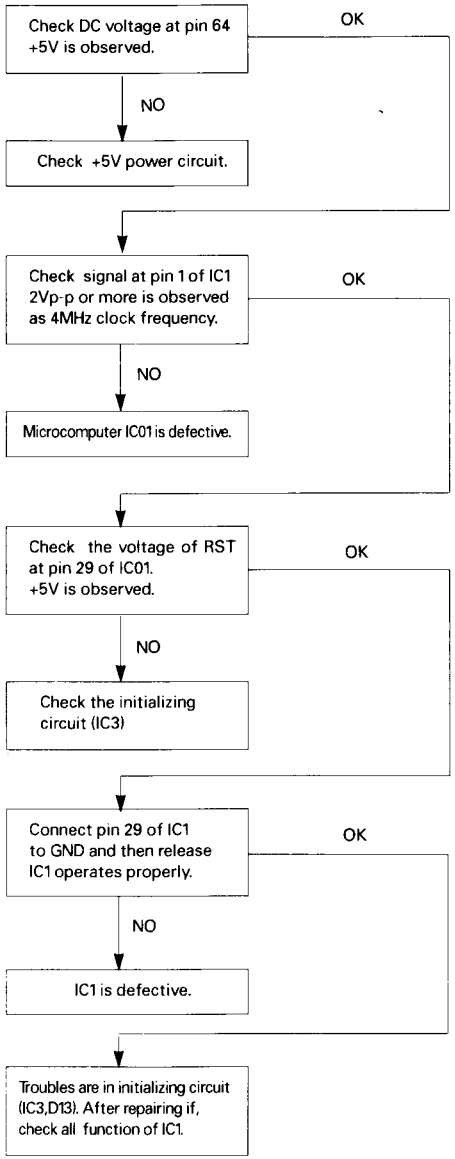

Remote Control Operation Check (CHART 3)
Note: Before checking RMT operation, check that key operation on TV set properly.

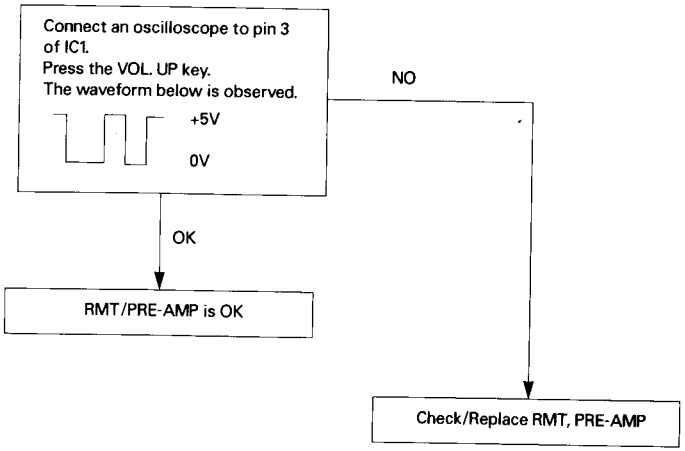

(CHART 4)
(1) On Screen Display Operation Check

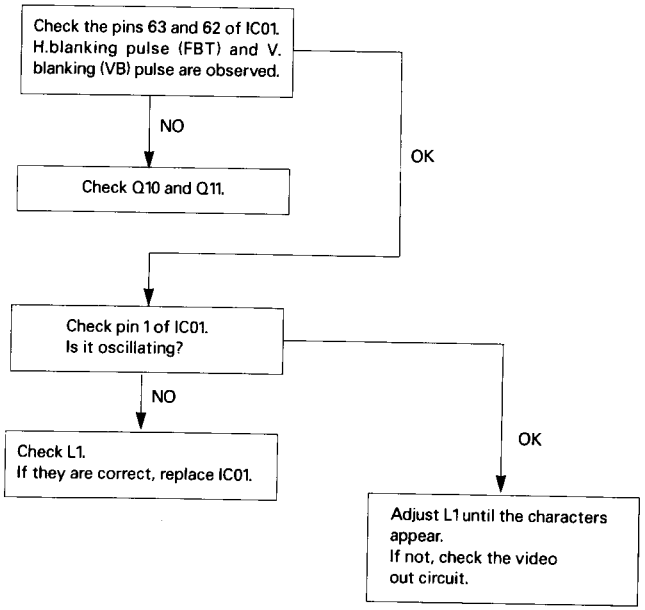

COMPONENT LOCATION GUIDE

(Refer to page 25)

C3	A5
C4	A5
C5	A4
C6	B4
C7	B4
C8	B4
C9	B4
C10	B4
C11	D3
C12	C4
C13	B4
C14	A5
C15	B5
C16	B5
C17	B5
C18	A4
C19	B5
C20	C5
C60	C5
C61	C5
C62	C4
C63	C5
C101	F5
C102	G5
C103	F5
C104	G5
C105	G5
C106	G5
C107	G4
C108	F5
C109	F5
C301	C3
C302	C2
C303	E3
C304	E3
C305	E3
C306	E3
C307	E3
C308	F2
C309	E3
C310	D2
C311	D2
C312	E2
C313	E2
C314	E2
C317	E2
C401	D3
C403	D2
C404	C1
C405	C2
C406	C2
C407	C1
C408	C2
C409	C2
C410	D2
C411	D2
C412	B2
C413	B1
C418	F2
C419	F1
C420	F1
C421	E2
C422	E2
C423	E1
C424	D1
C425	E2
C426	G3
C427	G3
C428	G3
C429	F3
C430	G3
C431	G3
C432	G3
C433	F3
C434	G3
C435	G3
C436	G3
C437	G3
C438	F2
C439	F2
C440	G1
C441	F3
C442	C2
C444	E2
C445	D1
C446	C1
C450	E2
C500	A2
C501	A2
C502	A2
C503	B2
C504	A3
C505	B3
C506	A3
C507	B3
C508	B3
C509	B3
C510	C3
C511	C3
C512	C3
C513	B2
C514	B2
C515	C3
C516	C3
C517	B3
C518	B3
C519	C3
C520	C3
C521	C3
C522	C2
C523	C3
C525	C2
C526	C2
C528	C2
C529	A1
C530	B2
C533	A2
C534	A1
C535	B1
C536	A2
C537	B1
C538	B2
C539	B1
C540	B1
C541	A2
C542	A2
C543	B1
C544	A2
C545	B2
C546	B2
C547	C2
C548	C2
C549	C2
C550	C2
C556	C2
C601	D5
C602	D4
C603	D5
C605	D5
C606	D5
C607	E5
C608	D5
C609	D5
C610	D5
C611	C5
C620	D5
D2	B4
D3	B4
D4	B4
D5	B4
D6	B4
D7	B4
D8	B4
D9	B4
D11	A4
D12	A4
D108	E4
D109	E4
D301	E3
D401	B1
D402	E1
D403	F2
D404	G3
D405	G3
D406	G2
D407	G3
D408	F3
D409	G3
D410	F2
D411	F3
D412	F3
D500	A1
D501	B1
D505	A1
D605	D5
D606	D5
DL501	B3
DL502	A2
FR401	D2
FR402	E2
FR403	G2
FR404	F2
FR405	F3
FR406	G2
FR407	F2
FR408	G1
FR601	C1
IC1	B5
IC2	C4
IC3	C5
IC4	B2
IC301	E3
IC401	F3
IC501	B2
IC601	D5
J1	A5
J2	A5
J3	A5
J4	A4
J5	A3
J6	A3
J7	A5
J8	A2
J9	A5
J10	A5
J13	A5
J15	A5
J16	A5
J17	A5
J18	B5
J20	B5
J21	B5
J22	B5
J23	B5
J24	B5
J25	B5
J26	B5
J27	C5
J28	B5
J30	C5
J31	C5
J32	C5
J33	C5
J34	C5
J35	C4
J36	C4
J37	C4
J38	C4
J39	C4
J40	B4
J41	B4
J42	B4
J45	B4
J46	B4
J47	A4
J48	B3
J49	A3
J50	A3
J51	A3
J52	A3
J53	A3
J54	A3
J55	C5
J56	C5
J57	C5
J59	D5
J60	C5
J61	D5
J62	C4
J63	D4
J64	D4
J65	C4
J66	D4
J70	D4
J71	D4
J72	D4
J73	D4
J74	D4
J75	D3
J76	D4
J77	D4
J78	D3
J79	E4
J80	D4
J81	D2
J82	D4
J83	D4
J84	E4
J85	D5
J86	C3
J87	E5
J88	E5
J89	E5
J90	E5
J91	E5
J92	E5
J93	E5
J94	E5
J95	E5
J96	E5
J97	E4
J98	D4
J99	D5
J100	E4
J101	D5
J102	E5
J103	E5
J104	E5
J105	E5
J106	E5
J110	F5
J112	E4
J113	E4
J114	E4
J115	E4
J116	F4
J117	F4
J118	F4
J119	F4
J120	F4
J121	F4
J122	F4
J123	F4
J124	F4
J125	F4
J126	E4
J127	E4
J128	E4
J129	E4
J130	E4
J132	F5
J133	F5
J134	G5
J135	F5
J136	G4
J137	G4
J138	G4
J139	G4
J140	G4
J141	G4
J142	G4
J143	G4
J144	F4
J145	F4
J146	F4
J147	F4
J148	G4
J149	G4
J150	G4
J151	A3
J152	B2
J153	B2
J154	B2
J155	B3
J156	B3
J157	B2
J159	C3
J161	C3
J162	C3
J164	C3
J165	C3
J166	C3
J167	C3
J169	C2
J170	D3
J171	D3
J172	D3
J173	D3
J176	D3
J177	D3
J178	D3
J179	D2
J180	D3
J181	D3
J182	D3
J183	D3
J184	D3
J185	D3
J186	D3
J187	C2
J188	D3
J190	D3
J191	D3
J192	D2
J193	D2
J194	D2
J195	D2
J196	D2
J197	D2
J198	D2
J199	D2
J200	D2
J201	D2
J202	C1
J204	C1
J205	C1
J206	C1
J207	C2
J208	C2
J209	B1
J210	C1
J211	B2
J213	B1
J214	B1
J215	B1
J216	B1
J217	B2
J219	A1
J220	B2
J221	B2
J222	B1
J223	B1
J225	B1
J226	B3
J227	B1
J229	A2
J230	A2
J232	A1
J233	A1
J234	A1
J235	A1
J236	D1
J237	C1
J238	B5
J239	B5
J240	D1
J245	E3
J246	E2
J247	E3
J248	E3
J250	F2
J251	F3
J252	F3
J253	G1
J254	G2
J255	C1
J256	F1
J257	D5
J258	D2
J259	G3
J262	D2
J263	E4
J264	F4
J270	D4
J272	B3
J276	A1
J280	F3
J282	B5
J300	C2
J301	D3
J303	D3
J304	D2
J305	D2
J306	D2
J307	E5
J308	E5
L1	A5
L101	F5
L401	B1
L402	E1
L403	E1
L404	D1
L405	E2
L406	F3
L407	G3
L451	C1
L500	A2
L501	B3
L502	B3
L503	B3
L504	C3
L506	A1
L511	C1
L512	B3
P401	E2
P402	F3
P501	C2
P502	C1
P604	C5
P605	C4
P607	B5
P608	E5
P801	G1
P01A	A3
P102A	F5
P103A	F4
P104A	E4
P1A	C5
P201A	G4
P202A	F4
P203A	E4
P204A	G4
P205A	G3
P403A	D1
P404A	D1
P405A	A5
P406A	A5
P406B	D3
P503A	A1
P601A	E5
P603A	C4
PA1	A2
Q4	E4
Q5	E4
Q6	D4
Q7	C5
Q8	B5
Q9	B5
Q10	B4
Q11	D3
Q12	B4
Q13	B5
Q16	C5
Q301	D3
Q302	E3
Q403	C1
Q404	C1
Q405	E2
Q406	E1
Q502	C3
Q503	C3
Q504	C3
Q505	B1
Q601	E5
R6	B5
R9	E4
R10	E4
R11	D4
R12	C4
R13	C4
R14	C4
R15	B4
R16	B4
R17	D3
R18	B4
R19	D3
R20	D3
R21	D3
R22	A3
R23	A3
R24	A3
R25	B4
R28	B4
R29	A2
R30	B4
R31	B4
R32	B4
R33	C4
R34	C4
R35	C4
R36	C4
R37	C4
R38	A5
R39	B5
R40	B5
R41	B5
R42	B5
R43	A5
R44	A5
R45	A4
R46	A4
R47	A4
R48	A4
R49	A5
R50	A4
R51	A4
R54	A5
R55	A5
R60	C5
R101	F5
R102	F5
R103	F5
R104	G5
R105	F5
R106	F5
R151	G5
R301	D3
R302	D3
R303	C3
R304	C2
R305	D2
R306	C2
R307	E3
R308	E2
R309	E2
R310	F3
R311	F3
R312	F3
R313	D2
R314	D2
R315	D2
R316	D2
R317	E2
R318	E2
R319	F3
R320	D3
R321	F3
R322	F3
R401	D3
R402	D2
R406	C1
R407	C1
R408	C2
R409	C2
R410	D2
R411	C2
R412	C1
R413	C1
R414	D2
R415	D3
R420	B1
R421	B1
R422	D2
R423	F3
R424	E2
R425	G2
R426	G2
R428	F1
R429	G3
R430	G3
R431	G3
R432	G2
R433	G2
R434	G1
R435	G1
R436	G1
R437	G3
R438	B1
R440	G3
R470	B2
R501	B1
R502	B1
R506	A1
R507	A1
R510	C3
R511	C3
R512	C3
R513	C3
R514	A2
R515	A2
R516	B2
R517	B3
R518	B3
R519	B3
R520	B3
R521	C3
R522	C3
R523	B2
R524	C3
R525	C3
R526	C3
R527	C3
R528	B2
R529	C3
R530	C3
R532	C2
R533	C3
R534	C2
R538	A2
R539	A2
R540	A1
R541	B1
R542	A1
R544	B2
R546	B1
R547	B1
R548	C2
R549	C2
R550	C2
R560	B1
R601	D4
R603	D5
R604	D4
R606	D5
R609	E5
R610	D5
R612	E5
R613	E5
R618	D5
R619	D5
RA1	B4
RA2	B5
RA3	C4
SW301	F3
SW302	F3
T401	F2
T402	E2
TU101	F5
VR301	C3
VR401	C1
VR501	B3
VR503	B1
X1	C5
X401	C1
X501	C3
X502	C2
ZD3	B5
ZD4	A4
ZD5	A4
ZD301	C2
ZD302	C2
ZD303	F3
ZD305	E3
ZD306	E3
ZD307	E3
ZD401	D2
ZD402	B1
ZD405	G2
ZD406	C2
ZD500	A1
ZD501	A1
ZD502	C3

[redacted]

LOCA. NO	PART NO	DESCRIPTION	
D451	0DD414809ED	DIODE	DS4148
D5	0DD414809ED	DIODE	DS4148
D500	0DD414809ED	DIODE	DS4148
D501	0DD414809ED	DIODE	DS4148
D503	0DD859009AA	DIODE	SILICON MA859 TAPING
D504	0DD859009AA	DIODE	SILICON MA859 TAPING
D505	0DD414809ED	DIODE	DS4148
D506	0DD414809ED	DIODE	DS4148
D6	0DD414809ED	DIODE	DS4148
D605	0DD414809ED	DIODE	DS4148
D606	0DD414809ED	DIODE	DS4148
D7	0DD414809ED	DIODE	DS4148
D8	0DD414809ED	DIODE	DS4148
D801	0DD414809ED	DIODE	DS4148
D802	0DD414809ED	DIODE	DS4148
D803	0DD150009CA	DIODE	RGP15J
D804	0DD120000BB	DIODE	FML-G12S
D805	0DD150009CA	DIODE	RGP15J
D806	0DD410000AB	DIODE	RU4C,LF-L1
D807	0DD414809ED	DIODE	DS4148
D808	0DD414809ED	DIODE	DS4148
D809	0DD150009CA	DIODE	RGP15J
D810	0DD150009CA	DIODE	RGP15J
D901	0DD414809ED	DIODE	DS4148
D902	0DD414809ED	DIODE	DS4148
D903	0DD414809ED	DIODE	DS4148
D904	0DD414809ED	DIODE	DS4148
D911	0DD414809ED	DIODE	DS4148
D912	0DD414809ED	DIODE	DS4148
D921	0DD414809ED	DIODE	DS4148
D931	0DD414809ED	DIODE	DS4148
D932	0DD414809ED	DIODE	DS4148
LDLD1	0DL500000AA	DIODE LED	SLV-50(DL-ILR)
LD801	0DL500000AA	DIODE LED	SLV-50(DL-ILR)
ZD110	0DZ510009AB	DIODE ZENER	MTZ5.1B
ZD200	0DZ910009BA	DIODE ZENER	MTZ9.1B
ZD3	0DZ330009BA	DIODE ZENER	HZT33
ZD301	0DZ120009AA	DIODE ZENER	Z12BM TA
ZD302	0DZ750009AA	DIODE ZENER	MTZ7.5B
ZD303	0DZ360009DA	DIODE ZENER	MTZ3.6B
ZD305	0DZ300009BA	DIODE ZENER	MTZ30B
ZD306	0DZ300009BA	DIODE ZENER	MTZ30B
ZD307	0DZ300009BA	DIODE ZENER	MTZ30B
ZD4	0DZ560009AA	DIODE ZENER	MTZ5.6B,TP(52MM),ROHM
ZD401	0DZ510009AB	DIODE ZENER	MTZ5.1B
ZD402	0DZ910009BA	DIODE ZENER	MTZ9.1B
ZD405	0DZ110009AA	DIODE ZENER	MTZ 11B
ZD406	0DZ110009AA	DIODE ZENER	MTZ 11B
ZD5	0DZ750009AA	DIODE ZENER	MTZ7.5B
ZD500	0DZ620009AA	DIODE ZENER	MTZ6.2B
ZD501	0DZ620009AA	DIODE ZENER	MTZ6.2B
ZD502	0DZ910009BA	DIODE ZENER	MTZ9.1B

LOCA. NO	PART NO	DESCRIPTION	
ZD503	0DZ510009AB	DIODE ZENER	MTZ5.1B
ZD904	0DZ180009AA	DIODE ZENER	MTZ18B,TP(52MM),ROHM
ZD802	0IT1431000D	IC,TEXAS INSTRUMENT	TL431ILP LP003 VAR.ZENER
VC110	181-069B	CAPACITOR	TRIMMER

ICs

IC110	0ISA755500A	IC, SANYO	LA7555 PLL
IC151	0IT0861500A	IC, TOSHIBA	TA8615N
IC2	0IAL240210A	IC,ATMEL	AT24C02-10PC 8D EEPROM(2K,IIC)
IC200	0IT0872000A	IC,TOSHIBA	TA8720AN 30P S-TEM/CH+A/V
IC201	0IM0140530A	IC, MOTOROLA	MC14053 B
IC3	0ISE805200A	IC, SEIKO	S8052ALB
IC301	0ISA783300A	IC,SANYO	LA7833 7SIP V/OUT 2.2A(P-P)
IC401	0IKE781200A	IC,KEC	KIA7812P(KIA78012AP),KEC
IC501	0IT0865900A	IC, TOSHIBA	TA8659AN
IC601	0ISG200900A	IC, SGS-THOMSON	TDA2009A,11SIP,LIN SOUND AMP
IC650	0IPH842500A	IC, PHILIPS	TDA8425 SOUND CONTROL
IC801	0ISM460520A	IC,SIEMENS	TDA4605-2 8DIP SMPS CONTROLER
IC802	0IKE780500K	IC,KEC	KIA7805PI 3P(TO-220IS) 5V,1A
IC803	0ITF110100A	IC, TELEFUNKEN	TCDT1101G,6DIP,PHOTO COUPLER
RA1	167-040A	IC	R-ARRAY(12X47K)
RA2	167-040C	IC	R-ARRAY(8X10K)
RA3	167-040K	IC	4.7KOHM(4.7K*4)

COILS & TRANSFORMERS

DL501	175-024B	DELAY LINE	1H PAL(PDL-644K1P SWCC)
DL502	150-Y01N	COIL	DELAY LINE 450NS
L1	150-163N	COIL	OSD CONTROL(MC-15A)
L101	150-166G	COIL	CHOKE 10UH
L110	150-167A	COIL	CHOKE 0.55UH K
L112	150-167A	COIL	CHOKE 0.55UH K
L113	150-489W	COIL	6.0MHZ SIF
L114	0LA0391K119	INDUCTOR AXIAL LEAD	3.9UH K 2.3*3.4 TP
L115	150-489U	COIL	VCO/AFT 38.0MHZ
L116	0LA0122K119	INDUCTOR	12UH K
L117	150-489U	COIL	VCO/AFT 38.0MHZ
L118	150-164P	COIL	P-6.0MHZ TRAP
L119	150-164N	COIL	P-4.5MHZ TRAP
L151	150-489W	COIL	6.0MHZ SIF
L152	150-489V	COIL	5.5MHZ ID
L154	0LA0821K119	INDUCTOR	8.2UH K
L155	0LA0561K119	INDUCTOR	5.6UH K
L156	0LA0122K119	INDUCTOR	12UH K
L157	0LA0222K119	INDUCTOR	22UH K
L158	0LA0821K119	INDUCTOR	8.2UH K
L2	0LA0222K119	INDUCTOR	22UH K
L200	0LA0682K119	INDUCTOR	68UH K
L201	0LA0152K119	INDUCTOR	15UH K
L202	0LA0181K119	INDUCTOR AXIAL LEAD	1.8UH K 2.3*3.4 TP
L401	0LA0152K119	INDUCTOR	15UH K
L404	150-840B	COIL	H-LINEARITY 25"
L405	150-1091	COIL	PL 6800 UHJ

[redacted]

LOCA. NO	PART NO	DESCRIPTION
L407	150-166G	COIL CHOKE 10UH
L451	150-717G	COIL CHOKE 600MH
L500	150-216B	COIL TRANS (CHROMA-DEMOD.)
L501	150-216B	COIL TRANS (CHROMA-DEMOD.)
L502	0LA0681K119	INDUCTOR AXIAL LEAD 6.8UH K 2.3*3.4 TP
L503	150-489Z	COIL BELL FILTER(MC92A)
L504	150-E10S	COIL VAR,07S 1D 4.6MHZ
L506	0LA0822K119	INDUCTOR 82UH K
L507	0LA0152K119	INDUCTOR 15UH K
L508	0LA0222K119	INDUCTOR 22UH K
L509	0LA0272K119	INDUCTOR 27UH K
L512	150-489Y	COIL DL PHASE
L650	0LA0102K119	INDUCTOR 10UH K
[redacted]		
L803	150-235E	COIL HOR.CHOKE 1MH(1A)
T402	151-386A	TRANSFORMER H.DRIVE 19Y4BY
[redacted]		

FERRITE CORES

L403	125-922K	CORE FERRITE 1UH
L804	125-123A	CORE FERRITE BFD3565R2F
L805	125-123A	CORE FERRITE BFD3565R2F
L806	125-123A	CORE FERRITE BFD3565R2F
L807	125-123A	CORE FERRITE BFD3565R2F
L808	125-123A	CORE FERRITE BFD3565R2F

TRANSISTORS

Q1	0TR319809AA	TRANSISTOR KTC3198-TP-Y (KTC1815)KEC
Q10	0TR319809AA	TRANSISTOR KTC3198-TP-Y (KTC1815)KEC
Q11	0TR319809AA	TRANSISTOR KTC3198-TP-Y (KTC1815)KEC
Q110	0TR102009AB	TRANSISTOR KRC102M,TP(KRC1202),KEC
Q111	0TR319809AA	TRANSISTOR KTC3198-TP-Y (KTC1815)KEC
Q112	0TR319809AA	TRANSISTOR KTC3198-TP-Y (KTC1815)KEC
Q113	0TR319809AA	TRANSISTOR KTC3198-TP-Y (KTC1815)KEC
Q12	0TR319809AA	TRANSISTOR KTC3198-TP-Y (KTC1815)KEC
Q13	0TR319809AA	TRANSISTOR KTC3198-TP-Y (KTC1815)KEC
Q151	0TR319809AA	TRANSISTOR KTC3198-TP-Y (KTC1815)KEC
Q152	0TR319809AA	TRANSISTOR KTC3198-TP-Y (KTC1815)KEC
Q153	0TR126609AA	TRANSISTOR KTA1266-TP-Y (KTA1015) KEC
Q154	0TR319809AA	TRANSISTOR KTC3198-TP-Y (KTC1815)KEC
Q155	0TR126609AA	TRANSISTOR KTA1266-TP-Y (KTA1015) KEC
Q156	0TR319809AA	TRANSISTOR KTC3198-TP-Y (KTC1815)KEC
Q16	0TR319809AA	TRANSISTOR KTC3198-TP-Y (KTC1815)KEC
Q200	0TR319809AA	TRANSISTOR KTC3198-TP-Y (KTC1815)KEC
Q201	0TR126609AA	TRANSISTOR KTA1266-TP-Y (KTA1015) KEC
Q202	0TR126609AA	TRANSISTOR KTA1266-TP-Y (KTA1015) KEC
Q204	0TR126609AA	TRANSISTOR KTA1266-TP-Y (KTA1015) KEC
Q301	0TR319809AA	TRANSISTOR KTC3198-TP-Y (KTC1815)KEC
Q302	0TR319809AA	TRANSISTOR KTC3198-TP-Y (KTC1815)KEC
Q4	0TR126609AA	TRANSISTOR KTA1266-TP-Y (KTA1015) KEC
Q403	0TR319809AA	TRANSISTOR KTC3198-TP-Y (KTC1815)KEC

LOCA. NO	PART NO	DESCRIPTION
Q404	0TR319809AA	TRANSISTOR KTC3198-TP-Y (KTC1815)KEC
Q405	0TR206800BA	TRANSISTOR KTC2068,KEC
Q406	0TR188600AA	TRANSISTOR 2SD1886,SANYO
Q451	0TR319809AA	TRANSISTOR KTC3198-TP-Y (KTC1815)KEC
Q453	0TR126609AA	TRANSISTOR KTA1266-TP-Y (KTA1015) KEC
Q5	0TR126609AA	TRANSISTOR KTA1266-TP-Y (KTA1015) KEC
Q502	0TR102009AB	TRANSISTOR KRC102M,TP(KRC1202),KEC
Q503	0TR126609AA	TRANSISTOR KTA1266-TP-Y (KTA1015) KEC
Q504	0TR126609AA	TRANSISTOR KTA1266-TP-Y (KTA1015) KEC
Q505	0TR319809AA	TRANSISTOR KTC3198-TP-Y (KTC1815)KEC
Q505	0TR319809AA	TRANSISTOR KTC3198-TP-Y (KTC1815)KEC
Q506	0TR102009AB	TRANSISTOR KRC102M,TP(KRC1202),KEC
Q6	0TR126609AA	TRANSISTOR KTA1266-TP-Y (KTA1015) KEC
Q601	0TR319809AA	TRANSISTOR KTC3198-TP-Y (KTC1815)KEC
Q650	0TR319809AA	TRANSISTOR KTC3198-TP-Y (KTC1815)KEC
Q7	0TR319809AA	TRANSISTOR KTC3198-TP-Y (KTC1815)KEC
Q8	0TR319809AA	TRANSISTOR KTC3198-TP-Y (KTC1815)KEC
Q801	0TR135100AB	TRANSISTOR KTD1351-Y(KTD880),KEC
Q802	0TR320509AB	TRANSISTOR KTC3205-Y (KTC2236A) TP KEC
Q803	0TR126609AA	TRANSISTOR KTA1266-TP-Y (KTA1015) KEC
Q804	0TR319809AA	TRANSISTOR KTC3198-TP-Y (KTC1815)KEC
Q805	0TR126609AA	TRANSISTOR KTA1266-TP-Y (KTA1015) KEC
Q9	0TR319809AA	TRANSISTOR KTC3198-TP-Y (KTC1815)KEC
Q901	0TR319809AA	TRANSISTOR KTC3198-TP-Y (KTC1815)KEC
Q902	0TR126609AA	TRANSISTOR KTA1266-TP-Y (KTA1015) KEC
Q911	0TR206800BA	TRANSISTOR KTC2068,KEC
Q912	0TR319809AA	TRANSISTOR KTC3198-TP-Y (KTC1815)KEC
Q921	0TR206800BA	TRANSISTOR KTC2068,KEC
Q922	0TR319809AA	TRANSISTOR KTC3198-TP-Y (KTC1815)KEC
Q931	0TR206800BA	TRANSISTOR KTC2068,KEC
Q932	0TR319809AA	TRANSISTOR KTC3198-TP-Y (KTC1815)KEC

RESISTORS

AR50	0RD1500F609	R,CARBON FILM 150 1/6W 5
AR51	0RD1500F609	R,CARBON FILM 150 1/6W 5
[redacted]		
FR451	0RF0102H609	R,FUSIBLE 10 1/2W 5
FR459	0RF0102J607	R,FUSIBLE 10 1W 5%
FR601	0RF0470J607	R,FUSIBLE 0.47 1W 5%
FR801	0RF0101H609	R,FUSIBLE 1.0 1/2W 5
FR802	0RF0470J607	R,FUSIBLE 0.47 1W 5%
J40	0RD0102F609	R,CARBON FILM 10 1/6W 5
RFR401	0RS1201J607	R,METAL FILM OXIDE 1.20K 1W 5%
RL801	141-018C	RELAY DG48D1-0(M)
[redacted]		
R1	0RD1001F609	R,CARBON FILM 1.0K 1/6W 5
R10	0RD5601F609	R,CARBON FILM 5.6K 1/6W 5

LOCA. NO	PART NO	DESCRIPTION
R101	0RD4704F609	R,CARBON FILM 4.7M 1/6W 5
R102	0RD4704F609	R,CARBON FILM 4.7M 1/6W 5
R103	0RD4704F609	R,CARBON FILM 4.7M 1/6W 5
R104	0RD4704F609	R,CARBON FILM 4.7M 1/6W 5
R105	0RD8202F609	R,CARBON FILM 82K 1/6W 5
R106	0RD1003F609	R,CARBON FILM 100K 1/6W 5
R11	0RD5601F609	R,CARBON FILM 5.6K 1/6W 5
R110	0RD3300F609	R,CARBON FILM 330 1/6W 5
R111	0RD2202F609	R,CARBON FILM 22K 1/6W 5
R112	0RD5601F609	R,CARBON FILM 5.6K 1/6W 5
R113	0RD2200G609	RESISTOR,FIXED CARBON FILM 220 1/4W 5 TA52
R114	0RD1001F609	R,CARBON FILM 1.0K 1/6W 5
R115	0RD0272F609	R,CARBON FILM 27 1/6W 5%
R116	0RD6800F609	R,CARBON FILM 680 1/6W 5
R117	0RD1002F609	R,CARBON FILM 10K 1/6W 5
R118	0RD1002F609	R,CARBON FILM 10K 1/6W 5
R119	0RD1302F609	R,CARBON FILM 13K 1/6W 5
R12	0RD2402F609	R,CARBON FILM 24K 1/6W 5
R120	0RD1002F609	R,CARBON FILM 10K 1/6W 5
R121	0RD1002F609	R,CARBON FILM 10K 1/6W 5
R122	0RD5601F609	R,CARBON FILM 5.6K 1/6W 5
R123	0RD2002F609	R,CARBON FILM 20K 1/6W 5
R124	0RD2201F609	R,CARBON FILM 2.2K 1/6W 5
R125	0RD4701G609	R,CARBON FILM 4.7K 1/4W 5
R126	0RD2202F609	R,CARBON FILM 22K 1/6W 5
R127	0RD4702F609	R,CARBON FILM 47K 1/6W 5
R128	0RD1000F609	R,CARBON FILM 100 1/6W 5
R129	0RD0682F609	R,CARBON FILM 68 1/6W 5
R13	0RD2402F609	R,CARBON FILM 24K 1/6W 5
R130	0RD1001F609	R,CARBON FILM 1.0K 1/6W 5
R131	0RD5600F609	R,CARBON FILM 560 1/6W 5
R132	0RD5600F609	R,CARBON FILM 560 1/6W 5
R133	0RD1501F609	R,CARBON FILM 1.5K 1/6W 5
R134	0RD1000F609	R,CARBON FILM 100 1/6W 5
R135	0RD2702F609	R,CARBON FILM 27K 1/6W 5
R136	0RD1001F609	R,CARBON FILM 1.0K 1/6W 5
R137	0RD1001F609	R,CARBON FILM 1.0K 1/6W 5
R138	0RD2702F609	R,CARBON FILM 27K 1/6W 5
R139	0RD1001F609	R,CARBON FILM 1.0K 1/6W 5
R14	0RD2402F609	R,CARBON FILM 24K 1/6W 5
R140	0RD1502F609	R,CARBON FILM 15K 1/6W 5
R141	0RD1202F609	R,CARBON FILM 12K 1/6W 5
R15	0RD4702F609	R,CARBON FILM 47K 1/6W 5
R151	0RD1801F609	R,CARBON FILM 1.8K 1/6W 5
R151	0RD3302F609	R,CARBON FILM 33K 1/6W 5
R152	0RD1300G609	RESISTOR,FIXED CARBON FILM 130 1/4W 5 TA52
R153	0RD1300G609	RESISTOR,FIXED CARBON FILM 130 1/4W 5 TA52
R154	0RD2701F609	R,CARBON FILM 2.7K 1/6W 5
R155	0RD2701F609	R,CARBON FILM 2.7K 1/6W 5
R156	0RD2201F609	R,CARBON FILM 2.2K 1/6W 5
R157	0RD8200F609	R,CARBON FILM 820 1/6W 5
R16	0RD4702F609	R,CARBON FILM 47K 1/6W 5

LOCA. NO	PART NO	DESCRIPTION
R160	0RD1200F609	R,CARBON FILM 120 1/6W 5
R161	0RD1001F609	R,CARBON FILM 1.0K 1/6W 5
R162	0RD1002F609	R,CARBON FILM 10K 1/6W 5
R163	0RD4702F609	R,CARBON FILM 47K 1/6W 5
R164	0RD1002F609	R,CARBON FILM 10K 1/6W 5
R165	0RD9101F609	R,CARBON FILM 9.1K 1/6W 5
R166	0RD1003F609	R,CARBON FILM 100K 1/6W 5
R167	0RD6800G609	R,CARBON FILM 680 1/4W 5
R168	0RD6800G609	R,CARBON FILM 680 1/4W 5
R169	0RD0272F609	R,CARBON FILM 27 1/6W 5%
R17	0RD3002F609	R,CARBON FILM 30K 1/6W 5
R170	0RD1002F609	R,CARBON FILM 10K 1/6W 5
R171	0RD1002F609	R,CARBON FILM 10K 1/6W 5
R172	0RD2200F609	R,CARBON FILM 220 1/6W 5
R173	0RD3001F609	R,CARBON FILM 3.0K 1/6W 5
R174	0RD1001F609	R,CARBON FILM 1.0K 1/6W 5
R175	0RD2201F609	R,CARBON FILM 2.2K 1/6W 5
R176	0RD1001F609	R,CARBON FILM 1.0K 1/6W 5
R177	0RD1004F609	R,CARBON FILM 1.0M 1/6W 5
R178	0RD1002F609	R,CARBON FILM 10K 1/6W 5
R179	0RD4701F609	R,CARBON FILM 4.7K 1/6W 5
R18	0RD3601F609	R,CARBON FILM 3.6K 1/6W 5
R180	0RD1501F609	R,CARBON FILM 1.5K 1/6W 5
R181	0RD1001F609	R,CARBON FILM 1.0K 1/6W 5
R182	0RD1001F609	R,CARBON FILM 1.0K 1/6W 5
R183	0RD1001F609	R,CARBON FILM 1.0K 1/6W 5
R184	0RD2700F609	R,CARBON FILM 270 1/6W 5
R185	0RD5100F609	R,CARBON FILM 510 1/6W 5
R186	0RD3000F609	R,CARBON FILM 300 1/6W 5
R187	0RD9102F609	R,CARBON FILM 91K 1/6W 5
R188	0RD9102F609	R,CARBON FILM 91K 1/6W 5
R189	0RD9102F609	R,CARBON FILM 91K 1/6W 5
R19	0RD5601F609	R,CARBON FILM 5.6K 1/6W 5
R2	0RD4700F609	R,CARBON FILM 470 1/6W 5
R20	0RD3601F609	R,CARBON FILM 3.6K 1/6W 5
R200	0RD1000F609	R,CARBON FILM 100 1/6W 5
R201	0RD1000F609	R,CARBON FILM 100 1/6W 5
R202	0RD1500F609	R,CARBON FILM 150 1/6W 5
R203	0RD0752F609	R,CARBON FILM 75 1/6W 5
R204	0RD1002F609	R,CARBON FILM 10K 1/6W 5
R205	0RD1001F609	R,CARBON FILM 1.0K 1/6W 5
R206	0RD1001F609	R,CARBON FILM 1.0K 1/6W 5
R207	0RD1000F609	R,CARBON FILM 100 1/6W 5
R208	0RD0822F609	R,CARBON FILM 82 1/6W 5
R209	0RD1000F609	R,CARBON FILM 100 1/6W 5
R21	0RD1002F609	R,CARBON FILM 10K 1/6W 5
R212	0RD1000F609	R,CARBON FILM 100 1/6W 5
R213	0RD1000F609	R,CARBON FILM 100 1/6W 5
R214	0RD1000F609	R,CARBON FILM 100 1/6W 5
R215	0RD1000F609	R,CARBON FILM 100 1/6W 5
R218	0RD1000F609	R,CARBON FILM 100 1/6W 5
R219	0RD4702F609	R,CARBON FILM 47K 1/6W 5

LOCA. NO	PART NO	DESCRIPTION
R22	ORD3900F609	R,CARBON FILM 390 1/6W 5
R221	ORD4702F609	R,CARBON FILM 47K 1/6W 5
R222	ORD1001F609	R,CARBON FILM 1.0K 1/6W 5
R223	ORD1001F609	R,CARBON FILM 1.0K 1/6W 5
R224	ORD4702F609	R,CARBON FILM 47K 1/6W 5
R225	ORD1500F609	R,CARBON FILM 150 1/6W 5
R23	ORD3900F609	R,CARBON FILM 390 1/6W 5
R230	ORD0752F609	R,CARBON FILM 75 1/6W 5
R231	ORD0752F609	R,CARBON FILM 75 1/6W 5
R232	ORD1000F609	R,CARBON FILM 100 1/6W 5
R233	ORD1000F609	R,CARBON FILM 100 1/6W 5
R234	ORD2700F609	R,CARBON FILM 270 1/6W 5
R235	ORD2201F609	R,CARBON FILM 2.2K 1/6W 5
R236	ORD1001F609	R,CARBON FILM 1.0K 1/6W 5
R237	ORD1000F609	R,CARBON FILM 100 1/6W 5
R238	ORD4702F609	R,CARBON FILM 47K 1/6W 5
R239	ORD2201F609	R,CARBON FILM 2.2K 1/6W 5
R24	ORD3900F609	R,CARBON FILM 390 1/6W 5
R241	ORD1001F609	R,CARBON FILM 1.0K 1/6W 5
R244	ORD0752F609	R,CARBON FILM 75 1/2W 5
R247	ORD1000F609	R,CARBON FILM 100 1/6W 5
R249	ORD1001F609	R,CARBON FILM 1.0K 1/6W 5
R25	ORD2701F609	R,CARBON FILM 2.7K 1/6W 5
R250	ORD1801F609	R,CARBON FILM 1.8K 1/6W 5
R251	ORD1001F609	R,CARBON FILM 1.0K 1/6W 5
R252	ORD2000F609	R,CARBON FILM 200 1/6W 5
R254	ORD1001F609	R,CARBON FILM 1.0K 1/6W 5
R255	ORD1201F609	R,CARBON FILM 1.2K 1/6W 5
R256	ORD3301F609	R,CARBON FILM 3.3K 1/6W 5
R257	ORD1002F609	R,CARBON FILM 10K 1/6W 5
R258	ORD2201F609	R,CARBON FILM 2.2K 1/6W 5
R259	ORD1000F609	R,CARBON FILM 100 1/6W 5
R26	ORD2701F609	R,CARBON FILM 2.7K 1/6W 5
R260	ORD1001F609	R,CARBON FILM 1.0K 1/6W 5
R261	ORD2201F609	R,CARBON FILM 2.2K 1/6W 5
R27	ORD2701F609	R,CARBON FILM 2.7K 1/6W 5
R28	ORD4300F609	R,CARBON FILM 430 1/6W 5
R3	ORD4702F609	R,CARBON FILM 47K 1/6W 5
R30	ORD4701F609	R,CARBON FILM 4.7K 1/6W 5
R301	ORD3002F609	R,CARBON FILM 30K 1/6W 5
R302	ORD2403F609	R,CARBON FILM 240K 1/6W 5
R303	ORD4702F609	R,CARBON FILM 47K 1/6W 5
R304	ORD5600F609	R,CARBON FILM 560 1/6W 5
R305	ORD1001G609	R,CARBON FILM 1K 1/4W 5
R306	ORD1000F609	R,CARBON FILM 100 1/6W 5
R307	ORD6201F609	R,CARBON FILM 6.2K 1/6W 5
R308	ORD4702G609	R,CARBON FILM 47K 1/4W 5
R309	ORD1002G609	R,CARBON FILM 10K 1/4W 5
R31	ORD4702F609	R,CARBON FILM 47K 1/6W 5
R310	ORD1001F609	R,CARBON FILM 1.0K 1/6W 5
R311	ORS1201J607	R,METAL FILM OXIDE 1.20K 1W 5%
R312	ORS1201J607	R,METAL FILM OXIDE 1.20K 1W 5%

LOCA. NO	PART NO	DESCRIPTION
R314	ORD2402F609	R,CARBON FILM 24K 1/6W 5
R315	ORD2402F609	R,CARBON FILM 24K 1/6W 5
R316	ORS1502H609	R,METAL FILM OXIDE 15K 1/2W 5
R317	ORD2001G609	R,CARBON FILM 2.0K 1/4W 5
R318	ORS2700J607	R,METAL FILM OXIDE 270 1W 5%
R319	ORD2201F609	R,CARBON FILM 2.2K 1/6W 5
R32	ORD4702F609	R,CARBON FILM 47K 1/6W 5
R320	ORS0161K607	RESISTOR,FIX METAL FILM OXIDE 1.50 2W 5% TA62
R321	ORD7500F609	R,CARBON FILM 750 1/6W 5
R322	ORD7500F609	R,CARBON FILM 750 1/6W 5
R33	ORD4702F609	R,CARBON FILM 47K 1/6W 5
R34	ORD1000F609	R,CARBON FILM 100 1/6W 5
R35	ORD1000F609	R,CARBON FILM 100 1/6W 5
R38	ORD2002F609	R,CARBON FILM 20K 1/6W 5
R39	ORD1002F609	R,CARBON FILM 10K 1/6W 5
R40	ORD3302F609	R,CARBON FILM 33K 1/6W 5
R401	ORD1002F609	R,CARBON FILM 10K 1/6W 5
R402	ORD3601F609	R,CARBON FILM 3.6K 1/6W 5
R404	ORD1001F609	R,CARBON FILM 1.0K 1/6W 5
R405	ORD0822G609	R,CARBON FILM 82 1/4W 5
R406	ORD4700F609	R,CARBON FILM 470 1/6W 5
R407	ORD3001F609	R,CARBON FILM 3.0K 1/6W 5
R408	ORD1001F609	R,CARBON FILM 1.0K 1/6W 5
R409	ORD2403F609	R,CARBON FILM 240K 1/6W 5
R41	ORD3302F609	R,CARBON FILM 33K 1/6W 5
R410	ORD1000F609	R,CARBON FILM 100 1/6W 5
R411	ORD2702F609	R,CARBON FILM 27K 1/6W 5
R412	ORD0102F609	R,CARBON FILM 10 1/6W 5
R413	ORD2200F609	R,CARBON FILM 220 1/6W 5
R414	ORD1002F609	R,CARBON FILM 10K 1/6W 5
R415	ORD1600F609	R,CARBON FILM 160 1/6W 5
R42	ORD3302F609	R,CARBON FILM 33K 1/6W 5
R422	ORD4300F609	R,CARBON FILM 430 1/6W 5
R423	ORD1800F609	R,CARBON FILM 180 1/6W 5
R424	ORD5101H609	R,CARBON FILM 5.1K 1/2W 5
R425	ORS6801K607	R,METAL FILM OXIDE 6.80K 2W 5%
R426	ORS6801K607	R,METAL FILM OXIDE 6.80K 2W 5%
R428	ORD0332H609	R,CARBON FILM 33 1/2W 5
R429	ORD1002F609	R,CARBON FILM 10K 1/6W 5
R43	ORD4701F609	R,CARBON FILM 4.7K 1/6W 5
R430	ORD2001H609	R,CARBON FILM 2.0K 1/2W 5
R431	ORD6200G609	RESISTOR,FIXED CARBON FILM 620 1/4W 5 TA52
R432	ORD2701F609	R,CARBON FILM 2.7K 1/6W 5
R433	ORD5601H609	R,CARBON FILM 5.6K 1/2W 5
R434	ORD1303G609	RESISTOR,FIXED CARBON FILM 130K 1/4W 5 TA52
R435	ORD1303G609	RESISTOR,FIXED CARBON FILM 130K 1/4W 5 TA52
R436	ORD1002G609	R,CARBON FILM 10K 1/4W 5
R437	ORD4701F609	R,CARBON FILM 4.7K 1/6W 5
R44	ORD4701F609	R,CARBON FILM 4.7K 1/6W 5
R440	ORD2001H609	R,CARBON FILM 2.0K 1/2W 5
R45	ORD1002F609	R,CARBON FILM 10K 1/6W 5
R452	ORD1003F609	R,CARBON FILM 100K 1/6W 5

LOCA. NO	PART NO	DESCRIPTION
R453	ORD1002F609	R,CARBON FILM 10K 1/6W 5
R454	ORD2703F609	R,CARBON FILM 270K 1/6W 5
R455	ORD8201F609	R,CARBON FILM 8.2K 1/6W 5
R456	ORD1001F609	R,CARBON FILM 1.0K 1/6W 5
R457	ORD3902F609	R,CARBON FILM 39K 1/6W 5
R458	ORD3901F609	R,CARBON FILM 3.9K 1/6W 5
R46	ORD1002F609	R,CARBON FILM 10K 1/6W 5
R460	ORD2701F609	R,CARBON FILM 2.7K 1/6W 5
R461	ORD4702F609	R,CARBON FILM 47K 1/6W 5
R462	ORD3602F609	R,CARBON FILM 36K 1/6W 5
R463	ORD1802F609	R,CARBON FILM 18K 1/6W 5
R464	ORD1002F609	R,CARBON FILM 10K 1/6W 5
R47	ORD1502F609	R,CARBON FILM 15K 1/6W 5
R48	ORD4702F609	R,CARBON FILM 47K 1/6W 5
R49	ORD6801F609	R,CARBON FILM 6.8K 1/6W 5
R50	ORD2002F609	R,CARBON FILM 20K 1/6W 5
R501	ORD8201F609	R,CARBON FILM 8.2K 1/6W 5
R502	ORD5602F609	R,CARBON FILM 56K 1/6W 5
R506	ORD6201F609	R,CARBON FILM 6.2K 1/6W 5
R507	ORD6801F609	R,CARBON FILM 6.8K 1/6W 5
R51	ORD1502F609	R,CARBON FILM 15K 1/6W 5
R510	ORD1002F609	R,CARBON FILM 10K 1/6W 5
R511	ORD1002F609	R,CARBON FILM 10K 1/6W 5
R512	ORD2202F609	R,CARBON FILM 22K 1/6W 5
R513	ORD2701F609	R,CARBON FILM 2.7K 1/6W 5
R514	ORD5600F609	R,CARBON FILM 560 1/6W 5
R515	ORD8201F609	R,CARBON FILM 8.2K 1/6W 5
R516	ORD2701F609	R,CARBON FILM 2.7K 1/6W 5
R517	ORD4301F609	R,CARBON FILM 4.3K 1/6W 5
R518	ORD1002F609	R,CARBON FILM 10K 1/6W 5
R519	ORD3900F609	R,CARBON FILM 390 1/6W 5
R520	ORD2001F609	R,CARBON FILM 2.0K 1/6W 5
R521	ORD5603F609	R,CARBON FILM 560K 1/6W 5
R522	ORD3000F609	R,CARBON FILM 300 1/6W 5
R523	ORD3302F609	R,CARBON FILM 33K 1/6W 5
R524	ORD2200F609	R,CARBON FILM 220 1/6W 5
R526	ORD5603F609	R,CARBON FILM 560K 1/6W 5
R527	ORD4704F609	R,CARBON FILM 4.7M 1/6W 5
R528	ORD4704F609	R,CARBON FILM 4.7M 1/6W 5
R529	ORD1501F609	R,CARBON FILM 1.5K 1/6W 5
R530	ORD1501F609	R,CARBON FILM 1.5K 1/6W 5
R532	ORD5603F609	R,CARBON FILM 560K 1/6W 5
R533	ORD1001F609	R,CARBON FILM 1.0K 1/6W 5
R534	ORD3301F609	R,CARBON FILM 3.3K 1/6W 5
R536	ORD8201F609	R,CARBON FILM 8.2K 1/6W 5
R537	ORD5600F609	R,CARBON FILM 560 1/6W 5
R538	ORD1501F609	R,CARBON FILM 1.5K 1/6W 5
R539	ORD1601F609	R,CARBON FILM 1.6K 1/6W 5
R54	ORD4301F609	R,CARBON FILM 4.3K 1/6W 5
R540	ORD2701F609	R,CARBON FILM 2.7K 1/6W 5
R541	ORD2201F609	R,CARBON FILM 2.2K 1/6W 5
R542	ORD1003F609	R,CARBON FILM 100K 1/6W 5

LOCA. NO	PART NO	DESCRIPTION
R544	ORD1001F609	R,CARBON FILM 1.0K 1/6W 5
R547	ORD2201F609	R,CARBON FILM 2.2K 1/6W 5
R548	ORD2200F609	R,CARBON FILM 220 1/6W 5
R549	ORD2200F609	R,CARBON FILM 220 1/6W 5
R55	ORD2701F609	R,CARBON FILM 2.7K 1/6W 5
R550	ORD2200F609	R,CARBON FILM 220 1/6W 5
R551	ORD6800G609	R,CARBON FILM 680 1/4W 5
R552	ORD3302F609	R,CARBON FILM 33K 1/6W 5
R553	ORD4700F609	R,CARBON FILM 470 1/6W 5
R554	ORD6801F609	R,CARBON FILM 6.8K 1/6W 5
R555	ORD2701F609	R,CARBON FILM 2.7K 1/6W 5
R556	ORD1000F609	R,CARBON FILM 100 1/6W 5
R557	ORD3302F609	R,CARBON FILM 33K 1/6W 5
R558	ORD3301F609	R,CARBON FILM 3.3K 1/6W 5
R559	ORD2201F609	R,CARBON FILM 2.2K 1/6W 5
R6	ORD4700F609	R,CARBON FILM 470 1/6W 5
R60	ORD1004F609	R,CARBON FILM 1.0M 1/6W 5
R601	ORD0102H609	R,CARBON FILM 10 1/2W 5
R603	ORS2201J607	RESISTOR,FIX METAL FILM OXIDE 2.20K 1W 5% TA62
R604	ORD0102H609	R,CARBON FILM 10 1/2W 5
R606	ORD1301F609	R,CARBON FILM 1.3K 1/6W 5
R609	ORD1002F609	R,CARBON FILM 10K 1/6W 5
R610	ORD0392F609	R,CARBON FILM 39 1/6W 5
R612	ORD2400F609	R,CARBON FILM 240 1/6W 5
R613	ORD2400F609	R,CARBON FILM 240 1/6W 5
R618	ORD1301F609	R,CARBON FILM 1.3K 1/6W 5
R619	ORD0392F609	R,CARBON FILM 39 1/6W 5
R650	ORD1501F609	R,CARBON FILM 1.5K 1/6W 5
R652	ORD1002F609	R,CARBON FILM 10K 1/6W 5
R653	ORD1001F609	R,CARBON FILM 1.0K 1/6W 5
R654	ORD4702F609	R,CARBON FILM 47K 1/6W 5
R655	ORD1001F609	R,CARBON FILM 1.0K 1/6W 5
R656	ORD4702F609	R,CARBON FILM 47K 1/6W 5
R657	ORD1001F609	R,CARBON FILM 1.0K 1/6W 5
R658	ORD1301F609	R,CARBON FILM 1.3K 1/6W 5
R659	ORD1001F609	R,CARBON FILM 1.0K 1/6W 5
R660	ORD1001F609	R,CARBON FILM 1.0K 1/6W 5
R801	180-783D	RESISTOR RC 1/2W 474 K TAPING
R802	180-344H	R,CEMENT RWR 1 OHM 10W J
R803	ORD2003H609	R,CARBON FILM 200K 1/2W 5
R804	ORS2202L667	RESISTOR,FIX METAL FILM OXIDE 22K 3W 5 SF30
R805	ORD6803H609	R,CARBON FILM 680K 1/2W 5
R806	ORD1202H609	R,CARBON FILM 12K 1/2W 5
R807	ORD1503H609	R,CARBON FILM 150K 1/2W 5
R808	ORD1203H609	R,CARBON FILM 120K 1/2W 5
R810	ORD2200G509	RESISTOR,FIXED CARBON FILM 220 1/4W 2 TA52
R811	ORD1002F609	R,CARBON FILM 10K 1/6W 5
R812	ORD3001F609	R,CARBON FILM 3.0K 1/6W 5
R813	ORD0272H609	R,CARBON FILM 27 1/2W 5
R815	ORS0472K607	R,METAL FILM OXIDE 47 2W 5%
R816	ORS1202L667	RESISTOR,FIX METAL FILM OXIDE 12K 3W 5 SF30
R817	ORS0332K607	R,METAL FILM OXIDE 33 2W 5%

LOCA. NO	PART NO	DESCRIPTION
R818	ORD0472H609	R,CARBON FILM 47 1/2W 5
R819	ORD1002F609	R,CARBON FILM 10K 1/6W 5
R820	ORD1002F609	R,CARBON FILM 10K 1/6W 5
R821	ORD2200H609	R,CARBON FILM 220 1/2W 5
R822	ORD0102F609	R,CARBON FILM 10 1/6W 5
R824	ORD4701F609	R,CARBON FILM 4.7K 1/6W 5
R825	ORD1802H609	RESISTOR,FIXED CARBON FILM 18K 1/2W 5 TA52
R826	ORD4702H609	RESISTOR,FIXED CARBON FILM 47K 1/2W 5 TA52
R827	ORD1003F609	R,CARBON FILM 100K 1/6W 5
R828	ORD2200F609	R,CARBON FILM 220 1/6W 5
R829	ORD1501F609	R,CARBON FILM 1.5K 1/6W 5
R831	180-244R	RESISTOR,CEMENT RWR 220 OHM 10W
R832	ORS2702K607	R,METAL FILM OXIDE 22K 2W 5%
R833	ORD2201F609	R,CARBON FILM 2.2K 1/6W 5
R834	ORD1001F609	R,CARBON FILM 1.0K 1/6W 5
R835	ORD2003F609	R,CARBON FILM 200K 1/6W 5
R836	ORD1002F609	R,CARBON FILM 10K 1/6W 5
R837	ORD4704F609	R,CARBON FILM 4.7M 1/6W 5
R839	ORD0474H609	R,CARBON FILM 4.7 1/2W 5
R840	ORD2703H609	R, CARBON FILM 270K 1/2W 5
R841	ORS4701H609	R,METAL FILM OXIDE 4.7K 1/2W 5
R842	ORD2003H609	R,CARBON FILM 200K 1/2W 5
R9	ORD5601F609	R,CARBON FILM 5.6K 1/6W 5
R901	ORD1003H609	R,CARBON FILM 100K 1/2W 5
R903	ORD1002F609	R,CARBON FILM 10K 1/6W 5
R904	ORD1801F609	R,CARBON FILM 1.8K 1/6W 5
R905	ORD3301F609	R,CARBON FILM 3.3K 1/6W 5
R906	ORD1001F609	R,CARBON FILM 1.0K 1/6W 5
R907	ORD1001F609	R,CARBON FILM 1.0K 1/6W 5
R908	ORD3300F609	R,CARBON FILM 330 1/6W 5
R909	ORD1002F609	R,CARBON FILM 10K 1/6W 5
R912	ORD1000F609	R,CARBON FILM 100 1/6W 5
R913	ORD3900F609	R,CARBON FILM 390 1/6W 5
R914	ORD0272F609	R,CARBON FILM 27 1/6W 5%
R915	ORD5600F609	R,CARBON FILM 560 1/6W 5
R916	ORS2702K607	R,METAL FILM OXIDE 27K 2W 5%
R917	ORS2702K607	R,METAL FILM OXIDE 27K 2W 5%
R918	ORD2701G609	R,CARBON FILM 2.7K 1/4W 5
R920	ORD3900F609	R,CARBON FILM 390 1/6W 5
R922	ORD1000F609	R,CARBON FILM 100 1/6W 5
R923	ORD5100F609	R,CARBON FILM 510 1/6W 5
R924	ORD0272F609	R,CARBON FILM 27 1/6W 5%
R925	ORD5100F609	R,CARBON FILM 510 1/6W 5
R926	ORS2702K607	R,METAL FILM OXIDE 27K 2W 5%
R927	ORS2702K607	R,METAL FILM OXIDE 27K 2W 5%
R928	ORD2701G609	R,CARBON FILM 2.7K 1/4W 5
R932	ORD1000F609	R,CARBON FILM 100 1/6W 5
R933	ORD3900F609	R,CARBON FILM 390 1/6W 5
R934	ORD0272F609	R,CARBON FILM 27 1/6W 5%
R935	ORD5600F609	R,CARBON FILM 560 1/6W 5

LOCA. NO	PART NO	DESCRIPTION
R936	ORS2702K607	R,METAL FILM OXIDE 27K 2W 5%
R937	ORS2702K607	R,METAL FILM OXIDE 27K 2W 5%
R938	ORD2701G609	R,CARBON FILM 2.7K 1/4W 5
R940	ORF0101K607	R,FUSIBLE 1 2W 5%
VD801	164-003D	VARISTOR SVC 561D-14A
VR1	180-451K	R,VARIABLE EVN-DJAA03 B473 HORIZONTAL<TA>
VR110	ORV1203D230	VARIABLE,CARBON FILM 20K 6 ST
VR301	180-451K	R,VARIABLE EVN-DJAA03 B473 HORIZONTAL<TA>
VR401	180-451C	R,VARIABLE EVN-DJAA03 B501 HORIZONTAL<TA>
VR451	ORV1472D330	VARIABLE,CARBON FILM 4.7K 6 ST
VR452	ORV1223D330	VARIABLE,CARBON FILM 22K 6 ST
VR501	180-451D	RESISTOR EVN-DJAA03 B102 HORIZONTAL<TA>
VR503	180-451H	R,VARIABLE EVN-DJAA03 B103
VR801	ORV1223D330	VARIABLE,CARBON FILM 22K 6 ST
VR911	180-451D	RESISTOR EVN-DJAA03 B102 HORIZONTAL<TA>
VR912	180-451C	R,VARIABLE EVN-DJAA03 B501 HORIZONTAL<TA>
VR922	180-451C	R,VARIABLE EVN-DJAA03 B501 HORIZONTAL<TA>
VR931	180-451D	RESISTOR EVN-DJAA03 B102 HORIZONTAL<TA>
VR932	180-451C	R,VARIABLE EVN-DJAA03 B501 HORIZONTAL<TA>

SUPPORTERS

	343-A36A	SUPPORTER 25"FBT(NC17A)
	343-A63A	SUPPORTER EWB MC-15A
	343-A85A	SUPPORTER PIP BOARD(25C10,29C10)
	343-B36A	SUPPORTER CARD BOARD(MC15A,29C42)
SS01	343-B02B	SUPPORTER CARD BOARD(0.5T,MC-15A)
SS02	343-B02B	SUPPORTER CARD BOARD(0.5T,MC-15A)
SS03	343-B02B	SUPPORTER CARD BOARD(0.5T,MC-15A)
SS04	343-B02B	SUPPORTER CARD BOARD(0.5T,MC-15A)
SS05	343-B02B	SUPPORTER CARD BOARD(0.5T,MC-15A)

SWITCHES

SW1	140-315B	SWITCH TACT
SW2	140-315B	SWITCH TACT
SW3	140-315B	SWITCH TACT
SW301	140-111A	SWITCH SVC P12T21
SW302	140-111A	SWITCH SVC P12T21
SW4	140-315B	SWITCH TACT
SW5	140-315B	SWITCH TACT
SW6	140-315B	SWITCH TACT
SW601	140-031F	SWITCH SLIDE SSB022 (25V 1A)
SW7	140-315B	SWITCH TACT
SW8	140-315B	SWITCH TACT

JACK & OSCILLATORS

SW603	380-377A	JACK DIN 01J0193 (S-JACK) WITH S/W
SW604	380-065B	JACK ASSY,PHONO
SW605	380-066C	JACK ASSY,PHONO(THRU-OUT)
SW606	380-065D	JACK ASSY,PHONO
SW610	380-065B	JACK ASSY,PHONO
SW611	380-065C	JACK ASSY,PHONO

LOCA. NO	PART NO	DESCRIPTION
SW612	380-065D	JACK ASSY,PHONO
X1	156-007H	OSCILLATOR 4.0MHZ(CL;35PF)
X501	156-006A	OSCILLATOR X-TAL 4.43MHZ (18U)
X502	156-001C	OSCILLATOR CRYSTAL 3.58MHZ

FILTERS

	166-272A	FILTER COMB (UGL-316KNT,SHOWA)
X151	166-E03B	FILTER RESO CSB500E 500
X401	166-E02H	FILTER RESO CSB503F2 503.5
Z110	166-018A	FILTER SAW OFWK1950(SIEMENS)
Z151	166-B02C	FILTER B.P FILTER SFSH5.5MCB-TF21
Z152	166-B02D	FILTER B.P FILTER SFSH6.0MCB-TF21
Z153	166-B02E	FILTER B.P FILTER SFSH6.5MCB-TF21
Z154	166-C02C	FILTER TRAP TPS5.5MB-TF21
Z155	166-C04B	FILTER TRAP TPWA03B-TF21(5.5/6.0)
Z156	166-C04A	FILTER TRAP TPS4.5MWA-TF21
Z157	166-B02A	FILTER B.P FILTER SFSH4.5MCB-TF21
Z158	166-B02D	FILTER B.P FILTER SFSH6.0MCB-TF21
Z201	166-C03B	FILTER TRAP TPS4.43MJ-TF21

PIP PARTS

PC06	181-444J	C,METALPOLYESTER 0.22MF 50V J
PC1	0CX2000K409	C,TUBULA(T.C) 20P 50V J
PC10	0CN1030F679	C,TUBULA(HIGH DIELE) 0.01MF 16V M
PC100	0CE476DF618	C,ELECTROLYTIC 47UF STD 16V M
PC101	0CE108DD618	CAPACITOR,ELECTROLYTIC 1000UF STD 10V M FL TP5
PC102	0CE476DF618	C,ELECTROLYTIC 47UF STD 16V M
PC103	0CN4710K519	C,TUBULA(HIGH DIELE) 470PF 50V K
PC105	0CK1040K945	C,CERAMIC(HIGH DIELE) 0.1M 50V Z
PC106	0CE108DD618	CAPACITOR,ELECTROLYTIC 1000UF STD 10V M FL TP5
PC107	0CE476DF618	C,ELECTROLYTIC 47UF STD 16V M
PC108	0CK1030K945	C,CERAMIC(HIGH DIELE) 0.01MF 50V Z
PC109	0CK1040K945	C,CERAMIC(HIGH DIELE) 0.1M 50V Z
PC11	0CQ4721N509	C,POLYESTER(MYLAR) 0.0047U 100V K
PC110	0CE476DF618	C,ELECTROLYTIC 47UF STD 16V M
PC111	0CE476DF618	C,ELECTROLYTIC 47UF STD 16V M
PC117	0CE476DF618	C,ELECTROLYTIC 47UF STD 16V M
PC119	0CE226DF618	C,ELECTROLYTIC 22UF STD 16V M
PC12	181-444P	CAPACITOR MPE,ECQ-V1H564JZ3(TR)
PC121	0CC2700K415	C,CERAMIC(TEMP COMP) 27P 50V J
PC122	0CN1030F679	C,TUBULA(HIGH DIELE) 0.01MF 16V M
PC125	0CK1030K945	C,CERAMIC(HIGH DIELE) 0.01MF 50V Z
PC126	0CK1030K945	C,CERAMIC(HIGH DIELE) 0.01MF 50V Z
PC127	0CK1030K945	C,CERAMIC(HIGH DIELE) 0.01MF 50V Z
PC13	0CQ6821N509	C,POLYESTER(MYLAR) 0.0068U 100V K
PC131	0CC1200K415	C,CERAMIC(TEMP COMP) 12P 50V J
PC132	0CC1200K415	C,CERAMIC(TEMP COMP) 12P 50V J
PC133	0CN1030F679	C,TUBULA(HIGH DIELE) 0.01MF 16V M
PC14	0CE476DF618	C,ELECTROLYTIC 47UF STD 16V M
PC15	0CN1810K519	C,TUBULA(HIGH DIELE) 180PF 50V K
PC16	0CQ2231N509	C,POLYESTER(MYLAR) 0.022MF 100V K
PC17	0CQ1521N509	C,POLYESTER(MYLAR) 0.0015U 100V K

LOCA. NO	PART NO	DESCRIPTION
PC18	0CK1040K945	C,CERAMIC(HIGH DIELE) 0.1M 50V Z
PC19	181-444E	C,METALPOLYESTER 0.1MF 50V J
PC2	0CE106DF618	C,ELECTROLYTIC 10UF STD 16V M
PC20	0CK1040K945	C,CERAMIC(HIGH DIELE) 0.1M 50V Z
PC21	0CE476DF618	C,ELECTROLYTIC 47UF STD 16V M
PC22	0CE476DF618	C,ELECTROLYTIC 47UF STD 16V M
PC23	0CC1210K415	CAPACITOR,CERAMIC(TEMP COMP) 120P 50V J NPO TP
PC24	181-444E	C,METALPOLYESTER 0.1MF 50V J
PC26	0CX4700K409	C,TUBULA(T.C) 47PF 50V J
PC27	0CN1510K519	C,TUBULA(HIGH DIELE) 150P 50V K
PC28	0CN1020K519	C,TUBULA(HIGH DIELE) 1000PF 50V K
PC29	0CN1210K519	C,TUBULA(HIGH DIELE) 120P 50V K
PC3	0CX2000K409	C,TUBULA(T.C) 20P 50V J
PC30	0CN1030F679	C,TUBULA(HIGH DIELE) 0.01MF 16V M
PC31	0CN1020K519	C,TUBULA(HIGH DIELE) 1000PF 50V K
PC32	0CK1040K945	C,CERAMIC(HIGH DIELE) 0.1M 50V Z
PC33	0CK1040K945	C,CERAMIC(HIGH DIELE) 0.1M 50V Z
PC34	0CK1040K945	C,CERAMIC(HIGH DIELE) 0.1M 50V Z
PC35	0CX3900K409	C,TUBULA(T.C) 39PF 50V J
PC38	0CE476DF618	C,ELECTROLYTIC 47UF STD 16V M
PC39	0CN1030F679	C,TUBULA(HIGH DIELE) 0.01MF 16V M
PC4	0CE106DF618	C,ELECTROLYTIC 10UF STD 16V M
PC40	0CC1010K415	C,CERAMIC(TEMP COMP) 100P 50V J
PC41	0CN1030F679	C,TUBULA(HIGH DIELE) 0.01MF 16V M
PC42	0CE105DK618	C,ELECTROLYTIC 1UF STD 50V M
PC43	0CC1010K415	C,CERAMIC(TEMP COMP) 100P 50V J
PC44	0CE476DF618	C,ELECTROLYTIC 47UF STD 16V M
PC45	0CK1040K945	C,CERAMIC(HIGH DIELE) 0.1M 50V Z
PC46	0CE476DF618	C,ELECTROLYTIC 47UF STD 16V M
PC47	181-444E	C,METALPOLYESTER 0.1MF 50V J
PC49	0CE105DK618	C,ELECTROLYTIC 1UF STD 50V M
PC5	0CK1040K945	C,CERAMIC(HIGH DIELE) 0.1M 50V Z
PC51	181-444E	C,METALPOLYESTER 0.1MF 50V J
PC53	0CE105DK618	C,ELECTROLYTIC 1UF STD 50V M
PC54	0CQ1521N509	C,POLYESTER(MYLAR) 0.0015U 100V K
PC55	0CQ6831N509	C,POLYESTER(MYLAR) 0.068U 100V K
PC56	0CN4720F669	CAPACITOR TUBULA(HIGH DIELE) 4700P 16V M X TA52
PC57	0CN2210K519	C,TUBULA(HIGH DIELE) 220PF 50V K
PC58	181-444L	C,MPE ECQ-V 0.33U 50V J
PC59	0CN1020K519	C,TUBULA(HIGH DIELE) 1000PF 50V K
PC60	0CQ4731N509	C,POLYESTER(MYLAR) 0.047U 100V K
PC61	181-444S	C,MPE ECQ-V 0.1MF 50V J
PC62	181-444L	C,MPE ECQ-V 0.33U 50V J
PC63	0CQ2231N509	C,POLYESTER(MYLAR) 0.022MF 100V K
PC64	0CQ2231N509	C,POLYESTER(MYLAR) 0.022MF 100V K
PC65	0CQ1031N509	C,POLYESTER(MYLAR) 0.01U 100V K
PC66	0CK1030K945	C,CERAMIC(HIGH DIELE) 0.01MF 50V Z
PC67	0CX2700K409	C,TUBULA(T.C) 27PF 50V J
PC68	0CQ1031N509	C,POLYESTER(MYLAR) 0.01U 100V K
PC69	0CE476DF618	C,ELECTROLYTIC 47UF STD 16V M
PC7	181-444J	C,METALPOLYESTER 0.22MF 50V J
PC70	0CC1010K415	C,CERAMIC(TEMP COMP) 100P 50V J

LOCA. NO	PART NO	DESCRIPTION
PC71	0CX2700K409	C,TUBULA(T.C) 27PF 50V J
PC72	181-444E	C,METALPOLYESTER 0.1MF 50V J
PC73	181-444E	C,METALPOLYESTER 0.1MF 50V J
PC74	0CN1810K519	C,TUBULA(HIGH DIELE) 180PF 50V K
PC75	0CN2210K519	C,TUBULA(HIGH DIELE) 220PF 50V K
PC76	0CX6800K409	C,TUBULA(T.C) 68P 50V J
PC77	0CX6800K409	C,TUBULA(T.C) 68P 50V J
PC8	0CN1030F679	C,TUBULA(HIGH DIELE) 0.01MF 16V M
PC84	0CX1200K409	C,TUBULA(T.C) 12PF 50V J
PC85	0CK1040K945	C,CERAMIC(HIGH DIELE) 0.1M 50V Z
PC86	0CX1200K409	C,TUBULA(T.C) 12PF 50V J
PC87	0CK1040K945	C,CERAMIC(HIGH DIELE) 0.1M 50V Z
PC88	0CX1200K409	C,TUBULA(T.C) 12PF 50V J
PC89	0CK1040K945	C,CERAMIC(HIGH DIELE) 0.1M 50V Z
PC9	0QE4720F618	C,ELECTROLYTIC 470UF STD 16V M
PC90	0CK1040K945	C,CERAMIC(HIGH DIELE) 0.1M 50V Z
PC91	0QE107DF618	C,ELECTROLYTIC 100UF STD 16V M
PC92	0CN1010K519	C,TUBULA(HIGH DIELE) 100PF 50V K
PC93	0CN1010K519	C,TUBULA(HIGH DIELE) 100PF 50V K
PC94	0CN1010K519	C,TUBULA(HIGH DIELE) 100PF 50V K
PC96	0CN1810K519	C,TUBULA(HIGH DIELE) 180PF 50V K
PC98	0QE220DF618	C,ELECTROLYTIC 22UF STD 16V M
PC99	0CK1040K945	C,CERAMIC(HIGH DIELE) 0.1M 50V Z
PD03	0DD414809ED	DIODE DS4148
PD1	0DD414809ED	DIODE DS4148
PD2	0DD414809ED	DIODE DS4148
PZD1	0DZ560009AA	DIODE ZENER MTZ5.6B,TP(52MM),ROHM
PZD2	0DZ560009AA	DIODE ZENER MTZ5.6B,TP(52MM),ROHM
PIC1	0ISG201400A	IC, SGS-THOMSON TEA2014
PIC10	0IKE780500K	IC,KEC KIA7805PI 3P(TO-220IS) 5V,1A
PIC11	0ISG514400A	IC, SGS-THOMSON TEA5114
PIC2	0IPH259500A	IC,PHILIPS TDA2595 18D H-COMBINATION
PIC7	0IPH465000A	IC, PHILIPS TDA4650(PHILIPS)
PIC9	0IKE780500K	IC,KEC KIA7805PI 3P(TO-220IS) 5V,1A
PL08	0LA0102K139	INDUCTOR 10UH K
PL1	0LA0102K139	INDUCTOR 10UH K
PL10	150-489C	COIL DELAY MATRIX ADJ.
PL11	0LA0102K139	INDUCTOR 10UH K
PL13	0LA0102K139	INDUCTOR 10UH K
PL2	0LA0682K119	INDUCTOR AXIAL LEAD 6.8UH K 2.3*3.4 TP
PL3	0LA0102K139	INDUCTOR 10UH K
PL4	0LA0102K119	INDUCTOR 10UH K
PL6	0LA0102K139	INDUCTOR 10UH K
PL9	150-489B	COIL SECAM BELL FILTER
PQ1	0TR319809AA	TRANSISTOR KTC3198-TP-Y (KTC1815)KEC
PQ11	0TR319809AA	TRANSISTOR KTC3198-TP-Y (KTC1815)KEC
PQ2	0TR319809AA	TRANSISTOR KTC3198-TP-Y (KTC1815)KEC
PQ3	0TR319809AA	TRANSISTOR KTC3198-TP-Y (KTC1815)KEC

LOCA. NO	PART NO	DESCRIPTION
PQ4	0TR319809AA	TRANSISTOR KTC3198-TP-Y (KTC1815)KEC
PQ5	0TR319809AA	TRANSISTOR KTC3198-TP-Y (KTC1815)KEC
PQ6	0TR319809AA	TRANSISTOR KTC3198-TP-Y (KTC1815)KEC
PQ7	0TR319809AA	TRANSISTOR KTC3198-TP-Y (KTC1815)KEC
PQ8	0TR319809AA	TRANSISTOR KTC3198-TP-Y (KTC1815)KEC
PR1	0RD4701F609	R,CARBON FILM 4.7K 1/6W 5
PR10	0RD4701F609	R,CARBON FILM 4.7K 1/6W 5
PR100	0RD1001F609	R,CARBON FILM 1.0K 1/6W 5
PR105	0RD4701F609	R,CARBON FILM 4.7K 1/6W 5
PR106	0RD4701F609	R,CARBON FILM 4.7K 1/6W 5
PR11	0RD8200F609	R,CARBON FILM 820 1/6W 5
PR12	0RD6800F609	R,CARBON FILM 680 1/6W 5
PR13	0RD4702F609	R,CARBON FILM 47K 1/6W 5
PR14	0RD4702F609	R,CARBON FILM 47K 1/6W 5
PR15	0RD1502F609	R,CARBON FILM 15K 1/6W 5
PR16	0RD3301F609	R,CARBON FILM 3.3K 1/6W 5
PR17	0RD1002F609	R,CARBON FILM 10K 1/6W 5
PR18	0RD1002F609	R,CARBON FILM 10K 1/6W 5
PR19	0RD3001F609	R,CARBON FILM 3.0K 1/6W 5
PR2	0RD2201F609	R,CARBON FILM 2.2K 1/6W 5
PR20	0RD4700F609	R,CARBON FILM 470 1/6W 5
PR21	0RD1001F609	R,CARBON FILM 1.0K 1/6W 5
PR22	0RD5102F609	R,CARBON FILM 51K 1/6W 5
PR23	0RD0221F609	R, CARBON FILM 2.2 1/6W 5
PR24	0RD1001F609	R,CARBON FILM 1.0K 1/6W 5
PR25	0RD2400F609	R,CARBON FILM 240 1/6W 5
PR26	0RD2400F609	R,CARBON FILM 240 1/6W 5
PR28	0RD1503F609	R,CARBON FILM 150K 1/6W 5
PR29	0RD3302F609	R,CARBON FILM 33K 1/6W 5
PR3	0RD4701F609	R,CARBON FILM 4.7K 1/6W 5
PR30	0RD1001F609	R,CARBON FILM 1.0K 1/6W 5
PR31	0RD3601F609	R,CARBON FILM 3.6K 1/6W 5
PR32	0RD1003F609	R,CARBON FILM 100K 1/6W 5
PR33	0RD5100F609	R,CARBON FILM 510 1/6W 5
PR34	0RD3301F609	R,CARBON FILM 3.3K 1/6W 5
PR35	0RD2200F609	R,CARBON FILM 220 1/6W 5
PR36	0RD2200F609	R,CARBON FILM 220 1/6W 5
PR37	0RD0752F609	R,CARBON FILM 75 1/6W 5
PR38	0RD0752F609	R,CARBON FILM 75 1/6W 5
PR4	0RD1001F609	R,CARBON FILM 1.0K 1/6W 5
PR40	0RD2001F609	R,CARBON FILM 2.0K 1/6W 5
PR41	0RD2001F609	R,CARBON FILM 2.0K 1/6W 5
PR42	0RD2001F609	R,CARBON FILM 2.0K 1/6W 5
PR43	0RD6200F609	R,CARBON FILM 620 1/6W 5
PR44	0RD6200F609	R,CARBON FILM 620 1/6W 5
PR45	0RD6200F609	R,CARBON FILM 620 1/6W 5
PR46	0RD4700F609	R,CARBON FILM 470 1/6W 5
PR48	0RD2200F609	R,CARBON FILM 220 1/6W 5
PR5	0RD1001F609	R,CARBON FILM 1.0K 1/6W 5
PR52	0RD3302F609	R,CARBON FILM 33K 1/6W 5
PR53	0RD3901F609	R,CARBON FILM 3.9K 1/6W 5

LOCA. NO	PART NO	DESCRIPTION
PR6	0RD1001F609	R,CARBON FILM 1.0K 1/6W 5
PR61	0RD5602F609	R,CARBON FILM 56K 1/6W 5
PR62	0RD4701F609	R,CARBON FILM 4.7K 1/6W 5
PR63	0RD1802F609	R,CARBON FILM 18K 1/6W 5
PR64	0RD6201F609	R,CARBON FILM 6.2K 1/6W 5
PR65	0RD3302F609	R,CARBON FILM 33K 1/6W 5
PR66	0RD1002F609	R,CARBON FILM 10K 1/6W 5
PR69	0RD6800F609	R,CARBON FILM 680 1/6W 5
PR7	0RD1203F609	R,CARBON FILM 120K 1/6W 5
PR77	0RD4301H609	RESISTOR,FIXED CARBON FILM 4.3K 1/2W 5 TA52
PR78	0RD2401G609	R,CARBON FILM 2.4K 1/4W 5
PR79	0RD2701G609	R,CARBON FILM 2.7K 1/4W 5
PR8	0RD1202F609	R,CARBON FILM 12K 1/6W 5
PR80	0RD1001F609	R,CARBON FILM 1.0K 1/6W 5
PR81	0RD1001F609	R,CARBON FILM 1.0K 1/6W 5
PR83	0RD0822H609	R,CARBON FILM 82 1/2W 5
PR84	0RD0822H609	R,CARBON FILM 82 1/2W 5
PR85	0RD1200H609	R,CARBON FILM 120 1/2W 5
PR86	0RD1200H609	R,CARBON FILM 120 1/2W 5
PR89	0RD6804F609	RESISTOR,FIXED CARBON FILM 6.8M 1/6W 5 TA52
PR9	0RD1003F609	R,CARBON FILM 100K 1/6W 5
PR94	0RD2200F609	R,CARBON FILM 220 1/6W 5
PR95	0RD2200F609	R,CARBON FILM 220 1/6W 5
PR96	0RD2200F609	R,CARBON FILM 220 1/6W 5
PVR2	180-451D	RESISTOR EVN-DJAA03 B102 HORIZONTAL<TA>
PX1	156-007E	OSCILLATOR X-TAL 7.159090 MHZ
PX1	387-807G	CONNECTOR ASSY 1P MX8610-(305-002E) 400MM
PX2	156-007A	OSCILLATOR X-TAL 8.86 MHZ
PZ1	166-F01D	FILTER EMI,DS306-93 Y5S 271M 50V TA
PZ2	166-F01D	FILTER EMI,DS306-93 Y5S 271M 50V TA
PZ4	166-F01G	FILTER EMI,DSS306-93FZ103N 100V TA
P101B	305-140J	HOUSING AE-7325H-10
P102B	305-140E	HOUSING AE-7325H-06
P103B	305-140J	HOUSING AE-7325H-10
P104B	305-140L	HOUSING AE-7325H-12
P105A	343-854B	SUPPORTER PCB(DACN-8N)
P201B	305-140L	HOUSING AE-7325H-12
P202B	305-140E	HOUSING AE-7325H-06
P203B	305-140J	HOUSING AE-7325H-10
P403A	366-172D	PIN AE-8325W-05
P403B	305-140D	HOUSING AE-7325H-05
P404A	366-172D	PIN AE-8325W-05
P404B	305-140D	HOUSING AE-7325H-05
P601B	305-140L	HOUSING AE-7325H-12

MISCELLANEOUS

LOCA. NO	PART NO	DESCRIPTION
	105-214G	TRANSMITTER MC-15A,GS,W/PIP,UNIFIED
	303-H73A	COVER BATTERY (105-212)
	381-197A	SOCKET ADAPTER

LOCA. NO	PART NO	DESCRIPTION
	381-226D	SOCKET CPT PCS628-01S/LESS BULK(NO5)
	441-228A	BUTTON POWER (2590)
	441-245A	BUTTON POWER (CFT-2590)
	441-279B	BUTTON POWER&CONTROL
	450-018C	ADAPTER ANT.(300 TO 75) PAL
	470-861A	LOCK ASSY,DOOR KIFCO
	482-H60B	INSTRUCTIONS(OWNER'S MANUAL) MC15A/P,GS,E,4 TX,281D
TU101	113-207B	TUNER 115-B-4010SF
P804	387-552M	CONNECTOR AS,2P (HOUSING TO HOUSING)INS
PA1	106-048A	PRE-AMP SBX-1677-02(38.0KHZ)
SG901	165-004A	SPARK GAP AG20PT 152F-L3N/S-23
SW602	385-102A	TERMINAL SPEAKER

LOCA. NO	PART NO	DESCRIPTION
C409	0CC3010K405	C,CERAMIC(TEMPCOMP) 300P 50V J SL TS
C410	0CE105DK618	C,ELECTROLYTIC 1UF STD 50V M
C411	0CN1020K519	C,TUBULA(HIGH DIELE) 1000PF 50V K
C415	0CN3910K519	C,TUBULA(HIGH DIELE) 390P 50V K
C416	0CK3310W515	C,CERAMIC(HIGH DIELE) 330P 500V K
C418	0CE336DF618	CAPACITOR,ELECTROLYTIC 33UF STD 160V M FL TP5
C420	0CK47102515	C,CERAMIC(HIGH DIELE) 470P 2KV K
C421	181-131B	C,METALPOLYPROPYLENE 8200PF 1.6KV J
C422	181-131B	C,METALPOLYPROPYLENE 8200PF 1.6KV J
[redacted]		
C424	181-128K	C,METAL POLYPROPYLENE 0.62MF 200V
C425	0CE1051P618	C,ELECTROLYTIC 1MF SMS 160V M
C426	0CN1810K519	C,TUBULA(HIGH DIELE) 180PF 50V K
C427	0CQ6821N519	CAPACITOR POLYESTER(MYLAR) 0.0068U 100V K POLY NI TP
C428	0CK4710W515	C,CERAMIC(HIGH DIELE) 470PF 500V K
C429	0CE107DF618	C,ELECTROLYTIC 100UF STD 16V M
C430	0CE476DH618	C,ELECTROLYTIC 47UF STD 25V M
C431	0CE477DH618	C,ELECTROLYTIC 470UF STD 25V M
C432	0CK2710W515	C,CERAMIC(HIGH DIELE) 270P 500V K
C433	0CK47101515	C,CERAMIC(HIGH DIELE) 470P 1KV K
C434	0CE477DK618	CAPACITOR,ELECTROLYTIC 470UF STD 50V M FL TP5
C435	0CE106DN618	C,ELECTROLYTIC 10UF STD 100V M FL TP5
C436	0CK1220W515	C,CERAMIC(HIGH DIELE) 1200P 500V K
C437	0CK47101515	C,CERAMIC(HIGH DIELE) 470P 1KV K
C438	0CK10201515	CAPACITOR,CERAMIC(HIGH DIELE) 1000P 1KV K B TS
C439	0CE2261R618	C,ELECTROLYTIC 22M SM 250V M
C440	181-059D	C,POLYPROPYLENE 0.047MF 200V K
C441	0CQ1031N509	C,POLYESTER(MYLAR) 0.01U 100V K
C442	0CE3351K636	CAPACITOR,ELECTROLYTIC 3.3000UF SM 50V M FM5 BP(D) TP
C445	0CE6851H652	CAPACITOR,ELECTROLYTIC 6.8000UF SM 25V M FM7.5 BP(S)
C446	0CE475DK618	C,ELECTROLYTIC 4.7UF STD 50V M
C450	0CK22201510	C,CERAMIC(HIGH DIELE) 2200P 1KV K
C451	0CE476DK618	C,ELECTROLYTIC 47UF STD 50V M
C452	0CE227DJ618	C,ELECTROLYTIC 220UF STD 35V M FL TP5
C453	0CE477DF618	C,ELECTROLYTIC 470UF STD 16V M
C454	0CQ1041N509	C,POLYESTER(MYLAR) 0.1MF 100V L
C455	0CQ1041N509	C,POLYESTER(MYLAR) 0.1MF 100V L
C5	0CE227DF618	C,ELECTROLYTIC 220UF STD 16V M
C500	0CN1810K519	C,TUBULA(HIGH DIELE) 180PF 50V K
C501	0CN1810K519	C,TUBULA(HIGH DIELE) 180PF 50V K
C502	0CN1810K519	C,TUBULA(HIGH DIELE) 180PF 50V K
C503	0CX8R20K519	CAPACITOR TUBULA(T.C) 8.2P 50V K C TA52
C504	0CE107DF618	C,ELECTROLYTIC 100UF STD 16V M
C505	0CN1030F679	C,TUBULA(HIGH DIELE) 0.01MF 16V M
C506	0CE106DF618	C,ELECTROLYTIC 10UF STD 16V M
C507	0CX8R20K519	CAPACITOR TUBULA(T.C) 8.2P 50V K C TA52
C508	0CN1030F679	C,TUBULA(HIGH DIELE) 0.01MF 16V M
C509	0CN1030F679	C,TUBULA(HIGH DIELE) 0.01MF 16V M
C510	0CN1030F679	C,TUBULA(HIGH DIELE) 0.01MF 16V M
C511	0CE4741K636	CAPACITOR,ELECTROLYTIC 0.47UF SM 50V M FM5 BP(D) TP
C512	0CN1030F679	C,TUBULA(HIGH DIELE) 0.01MF 16V M
C513	0CN1030F679	C,TUBULA(HIGH DIELE) 0.01MF 16V M

LOCA. NO	PART NO	DESCRIPTION
C514	0CN1030F679	C,TUBULA(HIGH DIELE) 0.01MF 16V M
C515	0CX2700K409	C,TUBULA(T.C) 27PF 50V J
C516	0CN1030F679	C,TUBULA(HIGH DIELE) 0.01MF 16V M
C517	0CQ2231N519	CAPACITOR POLYESTER(MYLAR) 0.022MF 100V K POLY TP
C518	0CQ1041N509	C,POLYESTER(MYLAR) 0.1MF 100V L
C519	0CN1030F679	C,TUBULA(HIGH DIELE) 0.01MF 16V M
C520	0CE225DK618	C,ELECTROLYTIC 2.2UF STD 50V M
C521	0CQ1031N509	C,POLYESTER(MYLAR) 0.01U 100V K
C522	0CX2700K409	C,TUBULA(T.C) 27PF 50V J
C523	0CX3900K409	C,TUBULA(T.C) 39PF 50V J
C525	181-057Z	CAPACITOR,POLYESTER 0.03MF 100V J
C526	0CX3000K409	C,TUBULA(T.C) 30P 50V J
C528	0CX1500K419	C,TUBULA(T.C) 15P 50V J
C529	0CN1810K519	C,TUBULA(HIGH DIELE) 180PF 50V K
C530	0CQ1041N509	C,POLYESTER(MYLAR) 0.1MF 100V L
C531	0CE227DF618	C,ELECTROLYTIC 220UF STD 16V M
C532	0CN1030F679	C,TUBULA(HIGH DIELE) 0.01MF 16V M
C533	0CQ1041N509	C,POLYESTER(MYLAR) 0.1MF 100V L
C534	0CN1030F679	C,TUBULA(HIGH DIELE) 0.01MF 16V M
C535	0CE226DK618	CAPACITOR,ELECTROLYTIC 22UF STD 50V M FL TP5
C536	0CE106DK618	C,ELECTROLYTIC 10UF STD 50V M
C537	0CE474DK618	C,ELECTROLYTIC 0.47UF STD 50V M
C538	0CN1020K519	C,TUBULA(HIGH DIELE) 1000PF 50V K
C539	0CN1030F679	C,TUBULA(HIGH DIELE) 0.01MF 16V M
C540	0CE105DK618	C,ELECTROLYTIC 1UF STD 50V M
C541	0CN1030F679	C,TUBULA(HIGH DIELE) 0.01MF 16V M
C542	0CN1030F679	C,TUBULA(HIGH DIELE) 0.01MF 16V M
C543	0CE106DK618	C,ELECTROLYTIC 10UF STD 50V M
C544	0CN1030F679	C,TUBULA(HIGH DIELE) 0.01MF 16V M
C545	181-027G	CAPACITOR TANTAL 35V 0.22UFK TP
C546	181-027G	CAPACITOR TANTAL 35V 0.22UFK TP
C547	181-027G	CAPACITOR TANTAL 35V 0.22UFK TP
C548	0CN8200K519	C,TUBULA(HIGH DIELE) 82P 50V K B
C549	0CN8200K519	C,TUBULA(HIGH DIELE) 82P 50V K B
C550	0CN8200K519	C,TUBULA(HIGH DIELE) 82P 50V K B
C551	0CN1030F679	C,TUBULA(HIGH DIELE) 0.01MF 16V M
C552	0CX4700K409	C,TUBULA(T.C) 47PF 50V J
C553	0CX2200K409	C,TUBULA(T.C) 22PF 50V J
C554	0CX2200K409	C,TUBULA(T.C) 22PF 50V J
C555	0CX4700K409	C,TUBULA(T.C) 47PF 50V J
C556	0CX2000K419	C,TUBULA(T.C) 20P 50V J
C599	0CE107DF618	C,ELECTROLYTIC 100UF STD 16V M
C6	0CN1020K519	C,TUBULA(HIGH DIELE) 1000PF 50V K
C60	0CX6200K409	C,TUBULA(T.C) 62PF 50V J
C601	0CE108DF618	C,ELECTROLYTIC 1000UF STD 16V M
C602	0CE108DF618	C,ELECTROLYTIC 1000UF STD 16V M
C603	181-444G	C,METALPOLYESTER 0.15MF 50V (TR)
C605	0CN1030F679	C,TUBULA(HIGH DIELE) 0.01MF 16V M
C606	0CE108DJ618	C,ELECTROLYTIC 1000UF STD 35V M FL TP5
C607	0CE2251K636	C,ELECTROLYTIC 2.2000UF SM 50V M FM5 BP(D) TP
C608	0CE227DF618	C,ELECTROLYTIC 220UF STD 16V M
C609	0CE227DF618	C,ELECTROLYTIC 220UF STD 16V M

LOCA. NO	PART NO	DESCRIPTION
C61	0CX6200K409	C,TUBULA(T.C) 62PF 50V J
C610	0CE2251K636	C,ELECTROLYTIC 2.2000UF SM 50V M FM5 BP(D) TP
C611	0CE227DF618	C,ELECTROLYTIC 220UF STD 16V M
C62	0CE475DK618	C,ELECTROLYTIC 4.7UF STD 50V M
C620	181-444G	C,METALPOLYESTER 0.15MF 50V (TR)
C650	0CE105DK618	C,ELECTROLYTIC 1UF STD 50V M
C651	0CE107DF618	C,ELECTROLYTIC 100UF STD 16V M
C652	0CE105DK618	C,ELECTROLYTIC 1UF STD 50V M
C653	0CE107DF618	C,ELECTROLYTIC 100UF STD 16V M
C654	0CQ1041N509	C,POLYESTER(MYLAR) 0.1MF 100V L
C655	0CQ3331N509	C,POLYESTER(MYLAR) 0.033U 100V K
C656	0CQ6821N519	CAPACITOR POLYESTER(MYLAR) 0.0068U 100V K POLY NI TP
C657	0CE475DK618	C,ELECTROLYTIC 4.7UF STD 50V M
C658	0CE105DK618	C,ELECTROLYTIC 1UF STD 50V M
C659	0CQ6831N509	C,POLYESTER(MYLAR) 0.068U 100V K
C660	0CE105DK618	C,ELECTROLYTIC 1UF STD 50V M
C661	0CQ5621N509	C,POLYESTER(MYLAR) 5600PF 100V K
C662	0CE105DK618	C,ELECTROLYTIC 1UF STD 50V M
C663	0CE105DK618	C,ELECTROLYTIC 1UF STD 50V M
C664	0CQ3331N509	C,POLYESTER(MYLAR) 0.033U 100V K
C665	0CQ6821N519	CAPACITOR POLYESTER(MYLAR) 0.0068U 100V K POLY NI TP
C666	0CE475DK618	C,ELECTROLYTIC 4.7UF STD 50V M
C7	0CN2210K519	C,TUBULA(HIGH DIELE) 220PF 50V K
C8	0CN1010K519	C,TUBULA(HIGH DIELE) 100PF 50V K
[redacted]		
C803	181-017A	CAPACITOR MPP(BOX)AC250V 0.10UF M
C804	0CK10201515	CAPACITOR,CERAMIC(HIGH DIELE) 1000P 1KV K B TS
C805	0CK10201515	CAPACITOR,CERAMIC(HIGH DIELE) 1000P 1KV K B TS
C806	0CK10201515	CAPACITOR,CERAMIC(HIGH DIELE) 1000P 1KV K B TS
C807	0CK10201515	CAPACITOR,CERAMIC(HIGH DIELE) 1000P 1KV K B TS
C808	181-474B	CAPACITOR CE(400V/200UF)SRF LEAD TYPE
C809	181-474B	CAPACITOR CE(400V/200UF)SRF LEAD TYPE
C810	0CE107DH618	CAPACITOR,ELECTROLYTIC 100UF STD 25V M FL TP5
C811	181-444J	C,METALPOLYESTER 0.22MF 50V J
C813	0CQ6821N519	CAPACITOR POLYESTER(MYLAR) 0.0068U 100V K POLY NI TP
C814	0CQ1031N519	CAPACITOR POLYESTER(MYLAR) 0.01U 100V K POLY NI TP
C815	0CE105DK618	C,ELECTROLYTIC 1UF STD 50V M
C817	181-143D	C,POLYPROPYLENE 0.047MF 800V J
C818	181-221H	CAPACITOR,ELECTROLYTIC 1000MF 35V
C819	181-091C	C,DE0705 R 471K 1KV
C820	0CE108DF618	C,ELECTROLYTIC 1000UF STD 16V M
[redacted]		
C823	0CC10112400	CAPACITOR,CERAMIC(TEMP COMP) 100PF 105C 2KV J SL R
C824	0CE4761R650	CAPACITOR,ELECTROLYTIC 47M SM 250V M FM7.5
C825	0CE10710650	CAPACITOR,ELECTROLYTIC 100M SM 200V M FM7.5
C826	0CE227DF618	C,ELECTROLYTIC 220UF STD 16V M
[redacted]		
C828	181-120G	CAPACITOR ACT 4KV E 472M FL10
C829	181-120G	CAPACITOR ACT 4KV E 472M FL10
C830	0CE227DF618	C,ELECTROLYTIC 220UF STD 16V M
C831	0CE106DF618	C,ELECTROLYTIC 10UF STD 16V M

LOCA. NO	PART NO	DESCRIPTION
C832	0CE108DH618	CAPACITOR,ELECTROLYTIC 1000UF STD 25V M FL TP5
C833	0CE4761R650	CAPACITOR,ELECTROLYTIC 47M SM 250V M FM7.5
C834	0CQ4731N509	C,POLYESTER(MYLAR) 0.047U 100V K
C835	181-011B	CAPACITOR PP 1600V 0.001UF J
C838	0CE227DF618	C,ELECTROLYTIC 220UF STD 16V M
C839	0CQ1031N519	CAPACITOR POLYESTER(MYLAR) 0.01U 100V K POLY NI TP
C840	181-091B	CAPACITOR DE5105 SL 271U 1KV TP5
C841	181-444E	C,METALPOLYESTER 0.1MF 50V J
C845	0CQ4731N509	C,POLYESTER(MYLAR) 0.047U 100V K
C850	0CQ2221N509	C,POLYESTER(MYLAR) 0.0022U 100V K
C9	0CN1010K519	C,TUBULA(HIGH DIELE) 100PF 50V K
C901	181-434K	C,CERAMIC(HI-K) 2200PF 2KV
C902	0CE106DH618	CAPACITOR,ELECTROLYTIC 10UF STD 25V M FL TP5
C904	0CE106DK618	C,ELECTROLYTIC 10UF STD 50V M
C911	0CK1040K945	C,CERAMIC(HIGH DIELE) 0.1M 50V Z
C912	0CN1010K519	C,TUBULA(HIGH DIELE) 100PF 50V K
C913	0CN3910K519	C,TUBULA(HIGH DIELE) 390P 50V K
C921	0CK1040K945	C,CERAMIC(HIGH DIELE) 0.1M 50V Z
C922	0CN1010K519	C,TUBULA(HIGH DIELE) 100PF 50V K
C923	0CN3910K519	C,TUBULA(HIGH DIELE) 390P 50V K
C931	0CK1040K945	C,CERAMIC(HIGH DIELE) 0.1M 50V Z
C932	0CN1010K519	C,TUBULA(HIGH DIELE) 100PF 50V K
C933	0CN3910K519	C,TUBULA(HIGH DIELE) 390P 50V K
J819	0CN1040K949	C,TUBULA(HIGH DIELE) 0.1M 50V Z

DIODES

BD801	0DD0560000AA	DIODE	D5SB60 BRIDGE (5A/600V)S.D.G
D1	0DD414809ED	DIODE	DS4148
D108	0DD414809ED	DIODE	DS4148
D109	0DD414809ED	DIODE	DS4148
D11	0DD414809ED	DIODE	DS4148
D110	0DD859009AA	DIODE	SILICON MA859 TAPING
D112	0DD414809ED	DIODE	DS4148
D113	0DD859009AA	DIODE	SILICON MA859 TAPING
D12	0DD414809ED	DIODE	DS4148
D151	0DD414809ED	DIODE	DS4148
D152	0DD414809ED	DIODE	DS4148
D153	0DD414809ED	DIODE	DS4148
D154	0DD414809ED	DIODE	DS4148
D155	0DD414809ED	DIODE	DS4148
D301	0DD150009CA	DIODE	RGP15J
[redacted]			
D404	0DD414809ED	DIODE	DS4148
D405	0DD414809ED	DIODE	DS4148
D406	0DD414809ED	DIODE	DS4148
D407	0DD200009AF	DIODE	RU-2MV
D408	0DD150009CA	DIODE	RGP15J
D409	0DD150009CA	DIODE	RGP15J
D410	0DD150009CA	DIODE	RGP15J
D411	0DD414809ED	DIODE	DS4148
D412	0DD414809ED	DIODE	DS4148

BLOCK DIAGRAM

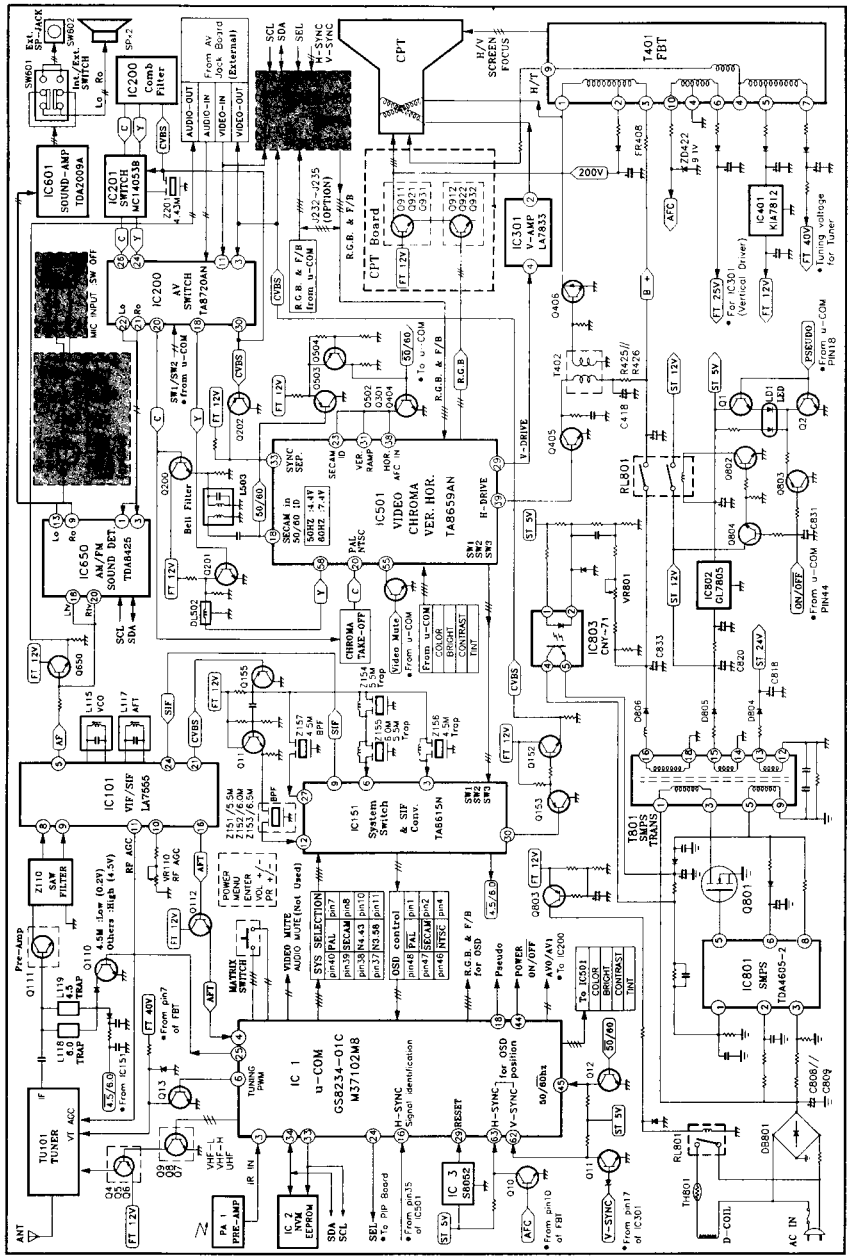

REPLACEMENT PARTS LIST

LOCA. NO	PART NO	DESCRIPTION
		CAPACITORS
C1	0CN1030F679	C,TUBULA(HIGH DIELE) 0.01MF 16V M
C10	0CN2210K519	C,TUBULA(HIGH DIELE) 220PF 50V K
C101	0CE107DF618	C,ELECTROLYTIC 100UF STD 16V M
C102	0CE225DK618	C,ELECTROLYTIC 2.2UF STD 50V M
C103	0CE475DK618	C,ELECTROLYTIC 4.7UF STD 50V M
C104	0CE475DK618	C,ELECTROLYTIC 4.7UF STD 50V M
C105	0CQ1041N509	C,POLYESTER(MYLAR) 0.1MF 100V L
C106	0CE106DF618	C,ELECTROLYTIC 10UF STD 16V M
C107	0CN3310K519	C,TUBULA(HIGH DIELE) 330P 50V K
C108	0CN1040K949	C,TUBULA(HIGH DIELE) 0.1M 50V Z
C109	0CN1040K949	C,TUBULA(HIGH DIELE) 0.1M 50V Z
C110	0CN1030F679	C,TUBULA(HIGH DIELE) 0.01MF 16V M
C111	0CN1030F679	C,TUBULA(HIGH DIELE) 0.01MF 16V M
C112	0CN1030F679	C,TUBULA(HIGH DIELE) 0.01MF 16V M
C115	0CN1030F679	C,TUBULA(HIGH DIELE) 0.01MF 16V M
C116	0CE227DF618	C,ELECTROLYTIC 220UF STD 16V M
C117	0CN1030F679	C,TUBULA(HIGH DIELE) 0.01MF 16V M
C118	0CN1020K519	C,TUBULA(HIGH DIELE) 1000PF 50V K
C119	0CN1030F679	C,TUBULA(HIGH DIELE) 0.01MF 16V M
C12	0CN1030F679	C,TUBULA(HIGH DIELE) 0.01MF 16V M
C120	0CE224DK618	C,ELECTROLYTIC 0.2200UF STD 50V M FL TP5
C121	0CE106DF618	C,ELECTROLYTIC 10UF STD 16V M
C122	0CE106DF618	C,ELECTROLYTIC 10UF STD 16V M
C123	0CQ1531N509	C,POLYESTER(MYLAR) 0.015MF 100V K
C124	0CX6800K409	C,TUBULA(T.C) 68P 50V J
C125	0CN1030F679	C,TUBULA(HIGH DIELE) 0.01MF 16V M
C126	0CN1030F679	C,TUBULA(HIGH DIELE) 0.01MF 16V M
C127	0CE106DF618	C,ELECTROLYTIC 10UF STD 16V M
C128	181-064T	C,ELECTROLYTIC 0.47MF 50V TR
C129	0CN1030F679	C,TUBULA(HIGH DIELE) 0.01MF 16V M
C13	0CN1030F679	C,TUBULA(HIGH DIELE) 0.01MF 16V M
C130	0CE476DF618	C,ELECTROLYTIC 47UF STD 16V M
C131	0CN1020K519	C,TUBULA(HIGH DIELE) 1000PF 50V K
C132	0CX2000K419	C,TUBULA(T.C) 20P 50V J
C133	0CQ1041N509	C,POLYESTER(MYLAR) 0.1MF 100V L
C14	0CN2210K519	C,TUBULA(HIGH DIELE) 220PF 50V K
C15	0CQ1041N509	C,POLYESTER(MYLAR) 0.1MF 100V L
C151	0CN1030F679	C,TUBULA(HIGH DIELE) 0.01MF 16V M
C152	0CX2200K409	C,TUBULA(T.C) 22PF 50V J
C153	0CE476DF618	C,ELECTROLYTIC 47UF STD 16V M
C154	0CN1030F679	C,TUBULA(HIGH DIELE) 0.01MF 16V M
C155	0CE105DK618	C,ELECTROLYTIC 1UF STD 50V M
C156	0CN1030F679	C,TUBULA(HIGH DIELE) 0.01MF 16V M
C157	0CN1030F679	C,TUBULA(HIGH DIELE) 0.01MF 16V M
C158	0CX4700K409	C,TUBULA(T.C) 47PF 50V J
C159	0CX4700K409	C,TUBULA(T.C) 47PF 50V J
C16	0CQ1041N509	C,POLYESTER(MYLAR) 0.1MF 100V L
C160	0CN4710K519	C,TUBULA(HIGH DIELE) 470PF 50V K
C161	0CN4710K519	C,TUBULA(HIGH DIELE) 470PF 50V K
C162	0CN1030F679	C,TUBULA(HIGH DIELE) 0.01MF 16V M
C163	0CN1030F679	C,TUBULA(HIGH DIELE) 0.01MF 16V M

LOCA. NO	PART NO	DESCRIPTION
C164	0CX4700K409	C,TUBULA(T.C) 47PF 50V J
C165	0CX4700K409	C,TUBULA(T.C) 47PF 50V J
C166	0CC8200K415	C,CERAMIC(TEMP COMP) 82P 50V J
C17	0CE475DK618	C,ELECTROLYTIC 4.7UF STD 50V M
C18	0CE106DK618	C,ELECTROLYTIC 10UF STD 50V M
C19	0CN1020K519	C,TUBULA(HIGH DIELE) 1000PF 50V K
C2	0CE107DF618	C,ELECTROLYTIC 100UF STD 16V M
C20	0CN1030F679	C,TUBULA(HIGH DIELE) 0.01MF 16V M
C200	0CN1030F679	C,TUBULA(HIGH DIELE) 0.01MF 16V M
C201	0CE227DF618	C,ELECTROLYTIC 220UF STD 16V M
C202	0CE476DF618	C,ELECTROLYTIC 47UF STD 16V M
C203	0CE105DK618	C,ELECTROLYTIC 1UF STD 50V M
C204	0CE105DK618	C,ELECTROLYTIC 1UF STD 50V M
C205	0CE476DF618	C,ELECTROLYTIC 47UF STD 16V M
C206	0CN1030F679	C,TUBULA(HIGH DIELE) 0.01MF 16V M
C209	0CE476DF618	C,ELECTROLYTIC 47UF STD 16V M
C210	0CE105DK618	C,ELECTROLYTIC 1UF STD 50V M
C211	0CE105DK618	C,ELECTROLYTIC 1UF STD 50V M
C213	0CE227DF618	C,ELECTROLYTIC 220UF STD 16V M
C214	0CN1030F679	C,TUBULA(HIGH DIELE) 0.01MF 16V M
C215	0CE104DK618	CAPACITOR,ELECTROLYTIC 0.1000UF STD 50V M FL TP5
C216	0CE476DF618	C,ELECTROLYTIC 47UF STD 16V M
C218	0CE107DF618	C,ELECTROLYTIC 100UF STD 16V M
C219	0CE107DF618	C,ELECTROLYTIC 100UF STD 16V M
C220	0CE107DF618	C,ELECTROLYTIC 100UF STD 16V M
C221	0CX6200K409	C,TUBULA(T.C) 62PF 50V J
C222	0CE106DF618	C,ELECTROLYTIC 10UF STD 16V M
C223	0CN1030F679	C,TUBULA(HIGH DIELE) 0.01MF 16V M
C230	0CN6810K519	C,TUBULA(HIGH DIELE) 680P 50V K
C3	0CE476DF618	C,ELECTROLYTIC 47UF STD 16V M
C301	181-027C	CAPACITOR TANTAL 25V 1.0UFK TP
C302	0CN1020K519	C,TUBULA(HIGH DIELE) 1000PF 50V K
C303	0CX4700K409	C,TUBULA(T.C) 47PF 50V J
C304	0CQ1021N509	C,POLYESTER(MYLAR) 0.001U 100V K
C305	0CE107DJ618	C,ELECTROLYTIC 100UF STD 35V M FL TP5
C306	0CN3310K519	C,TUBULA(HIGH DIELE) 330P 50V K
C307	0CN1030F679	C,TUBULA(HIGH DIELE) 0.01MF 16V M
C308	0CE106DK618	C,ELECTROLYTIC 10UF STD 50V M
C309	0CE108DJ618	C,ELECTROLYTIC 1000UF STD 35V M FL TP5
C310	181-027C	CAPACITOR TANTAL 25V 1.0UFK TP
C311	181-027H	CAPACITOR TANTAL 35V 0.47UFK TP
C312	0CE228DH61A	CAPACITOR,ELECTROLYTIC 2200UF STD 25V M FL TP7.5
C313	0CQ1541N501	CAPACITOR POLYESTER(MYLAR) 0.15U 100V K POLY F5
C317	0CK3320W515	CAPACITOR CERAMIC(HIGH DIELE) 3300P 500V K B TS
C4	0CE225DK618	C,ELECTROLYTIC 2.2UF STD 50V M
C401	0CN1020K519	C,TUBULA(HIGH DIELE) 1000PF 50V K
C403	0CN5610K519	C,TUBULA(HIGH DIELE) 560P 50V K
C404	0CN1030F679	C,TUBULA(HIGH DIELE) 0.01MF 16V M
C405	0CE106DF618	C,ELECTROLYTIC 10UF STD 16V M
C406	0CQ1531N519	CAPACITOR POLYESTER(MYLAR) 0.015MF 100V K POLY NI TP
C407	0CQ2731N509	C,POLYESTER(MYLAR) 0.027U 100V K
C408	181-057Z	CAPACITOR,POLYESTER 0.03MF 100V J

EXPLODED VIEW

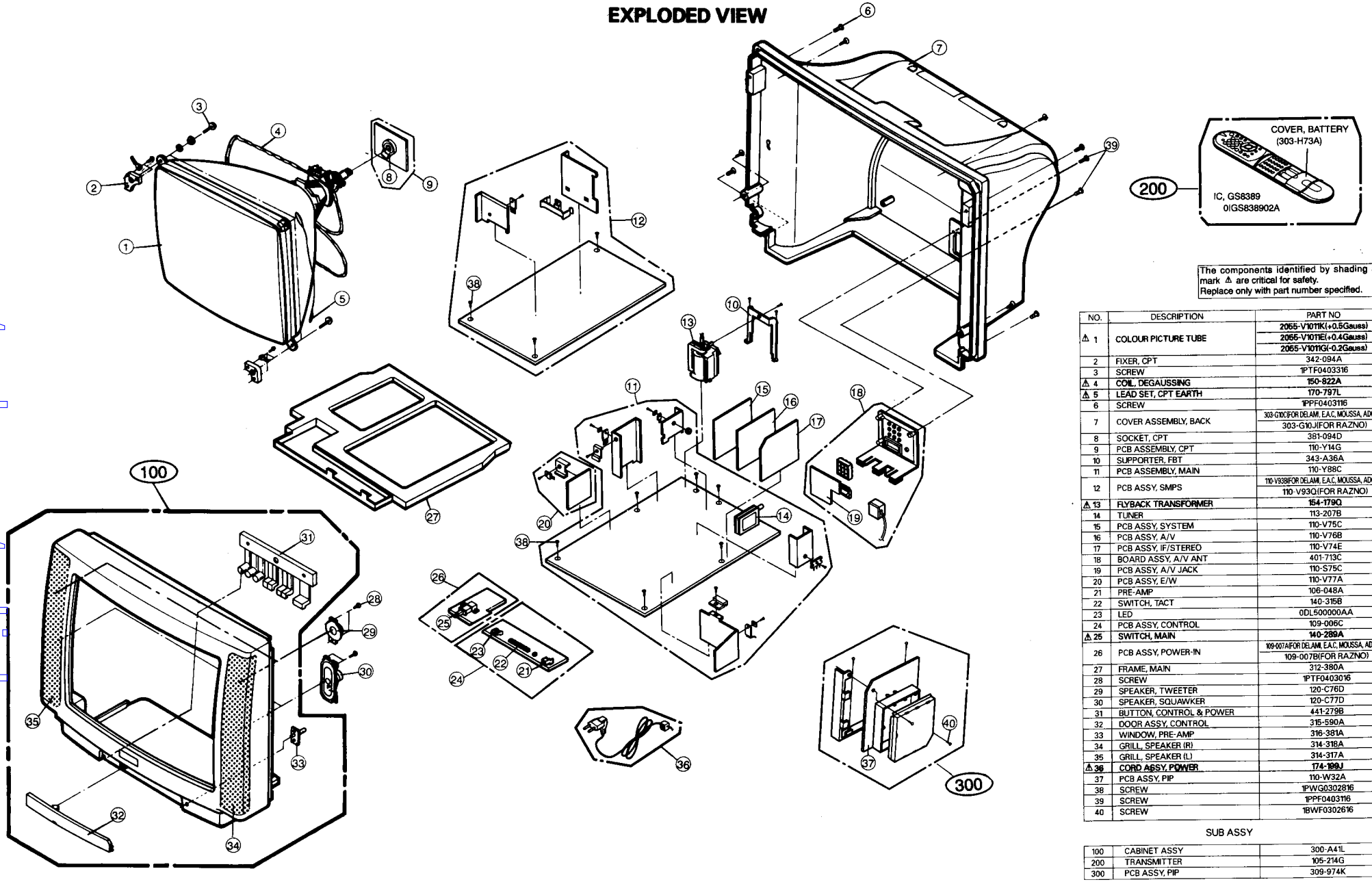

The components identified by shading and mark ⚠ are critical for safety.
Replace only with part number specified.

NO.	DESCRIPTION	PART NO
⚠ 1	COLOUR PICTURE TUBE	2055-V1011K(+0.5Gauss)
		2055-V1011E(+0.4Gauss)
		2055-V1011G(-0.2Gauss)
2	FIXER, CPT	342-094A
3	SCREW	1PTF0403316
⚠ 4	COIL, DEGAUSSING	150-822A
⚠ 5	LEAD SET, CPT EARTH	170-797L
6	SCREW	1PPF0403116
7	COVER ASSEMBLY, BACK	303-G10C(FOR DELAMI, E.A.C, MOUSSA, ADC-C01)
		303-G10J(FOR RAZNO)
8	SOCKET, CPT	381-094D
9	PCB ASSEMBLY, CPT	110-Y14G
10	SUPPORTER, FBT	343-A36A
11	PCB ASSEMBLY, MAIN	110-Y88C
12	PCB ASSY, SMPS	110-V93B(FOR DELAMI, E.A.C, MOUSSA, ADC-C01)
		110-V93Q(FOR RAZNO)
⚠ 13	FLYBACK TRANSFORMER	154-179Q
14	TUNER	113-207B
15	PCB ASSY, SYSTEM	110-V75C
16	PCB ASSY, A/V	110-V76B
17	PCB ASSY, IF/STEREO	110-V74E
18	BOARD ASSY, A/V ANT	401-713C
19	PCB ASSY, A/V JACK	110-S75C
20	PCB ASSY, E/W	110-V77A
21	PRE-AMP	106-048A
22	SWITCH, TACT	140-315B
23	LED	0DL500000AA
24	PCB ASSY, CONTROL	109-006C
⚠ 25	SWITCH, MAIN	140-289A
26	PCB ASSY, POWER-IN	109-007A(FOR DELAMI, E.A.C, MOUSSA, ADC-C01)
		109-007B(FOR RAZNO)
27	FRAME, MAIN	312-380A
28	SCREW	1PTF0403016
29	SPEAKER, TWEETER	120-C76D
30	SPEAKER, SQUAWKER	120-C77D
31	BUTTON, CONTROL & POWER	441-279B
32	DOOR ASSY, CONTROL	315-590A
33	WINDOW, PRE-AMP	316-381A
34	GRILL, SPEAKER (R)	314-318A
35	GRILL, SPEAKER (L)	314-317A
⚠ 36	CORD ASSY, POWER	174-199J
37	PCB ASSY, PIP	110-W32A
38	SCREW	1PWG0302816
39	SCREW	1PPF0403116
40	SCREW	1BWF0302616

SUB ASSY

100	CABINET ASSY	300-A41L
200	TRANSMITTER	105-214G
300	PCB ASSY, PIP	309-974K

GRAM(MC-15A)

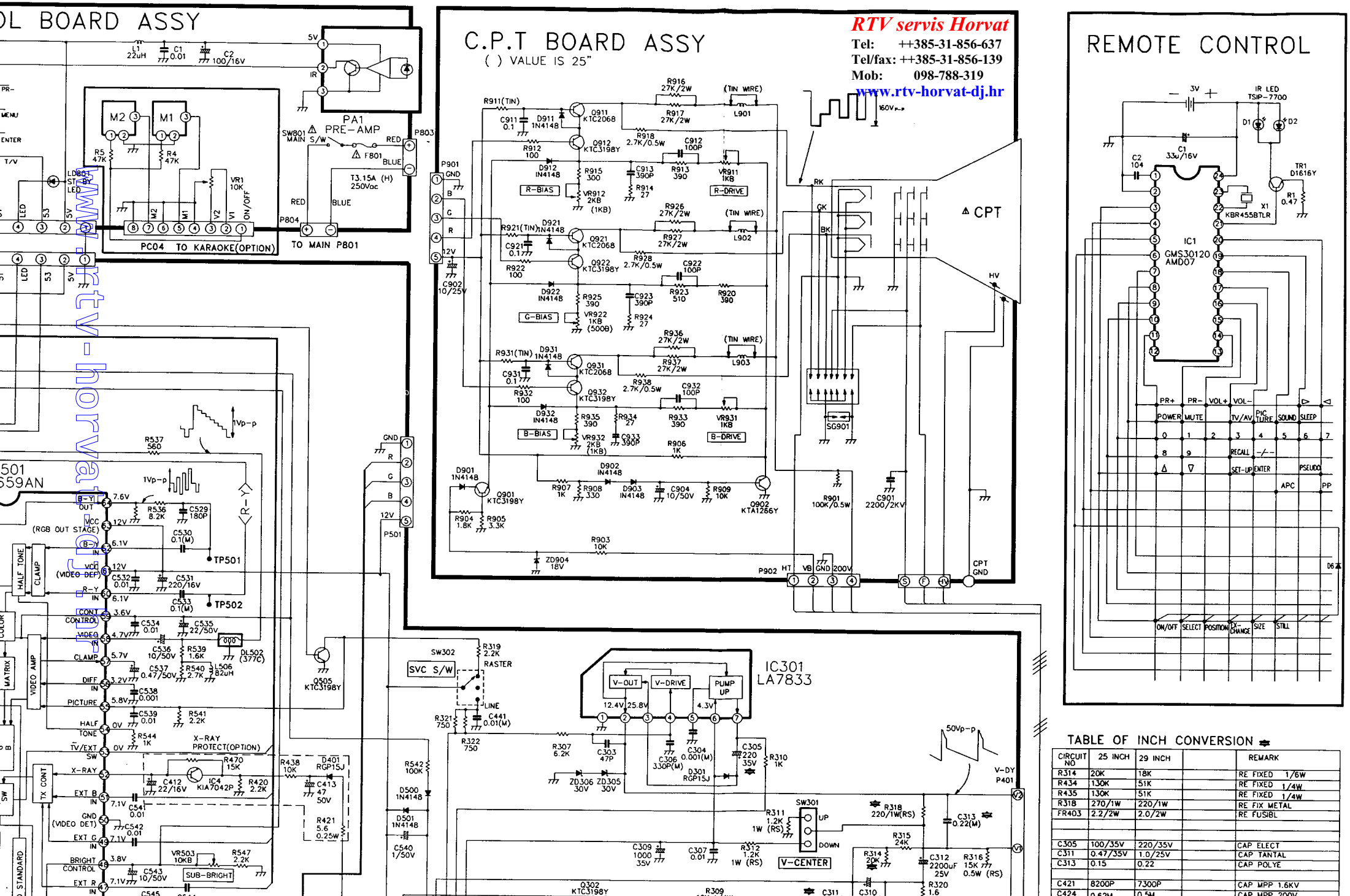

TABLE OF INCH CONVERSION

CIRCUIT NO	25 INCH	29 INCH		REMARK
R314	20K	18K		RE FIXED 1/6W
R434	130K	51K		RE FIXED 1/4W
R435	130K	51K		RE FIXED 1/4W
R318	270/1W	220/1W		RE FIX METAL
FR403	2.2/2W	2.0/2W		RE FUSIBL
C305	100/35V	220/35V		CAP ELECT
C311	0.47/35V	1.0/25V		CAP TANTAL
C313	0.15	0.22		CAP POLYE
C421	8200P	7300P		CAP MPP 1.6KV
C424	0.62M	0.5M		CAP MPP 200V

CIRCUIT DIAGRAM

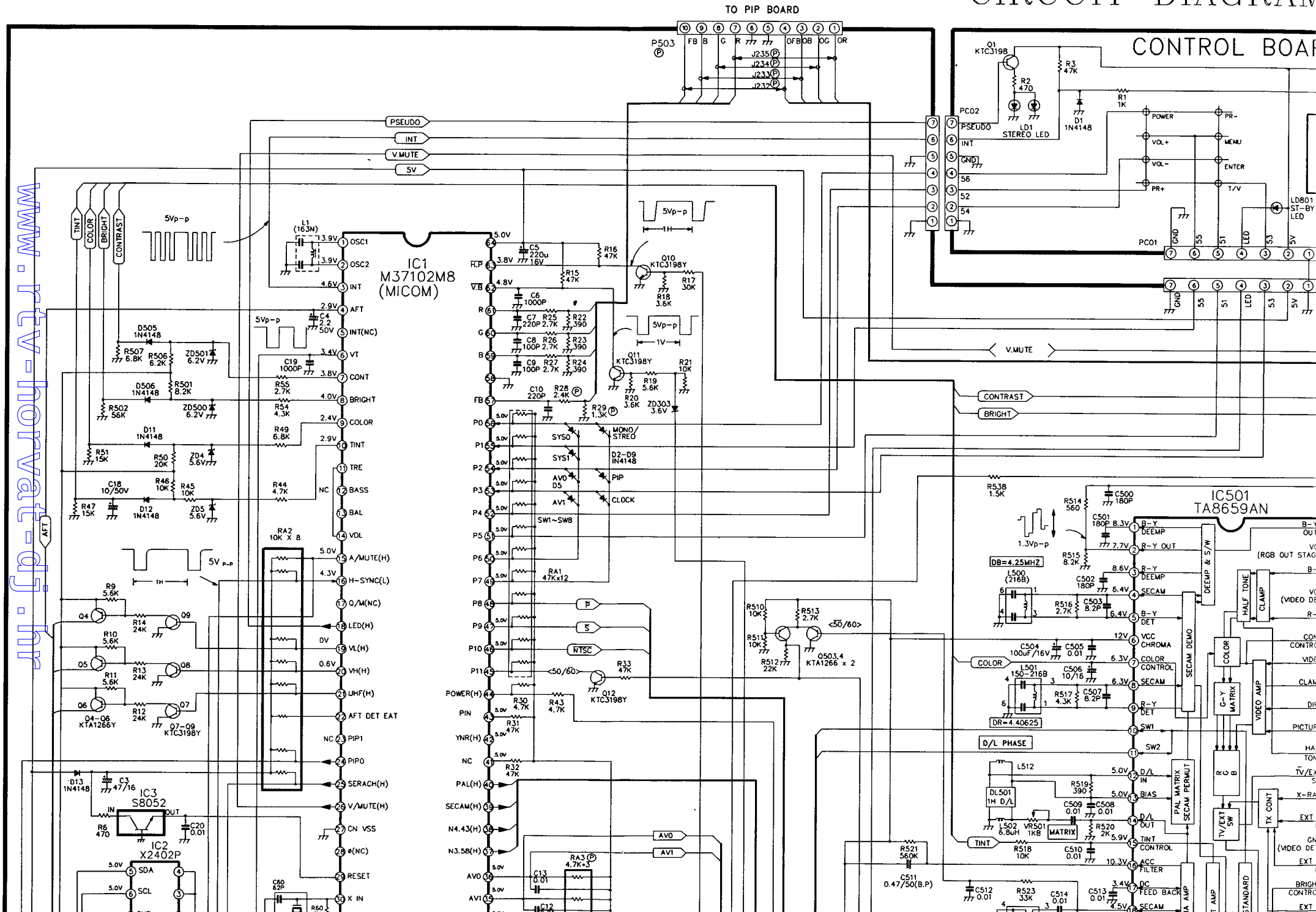

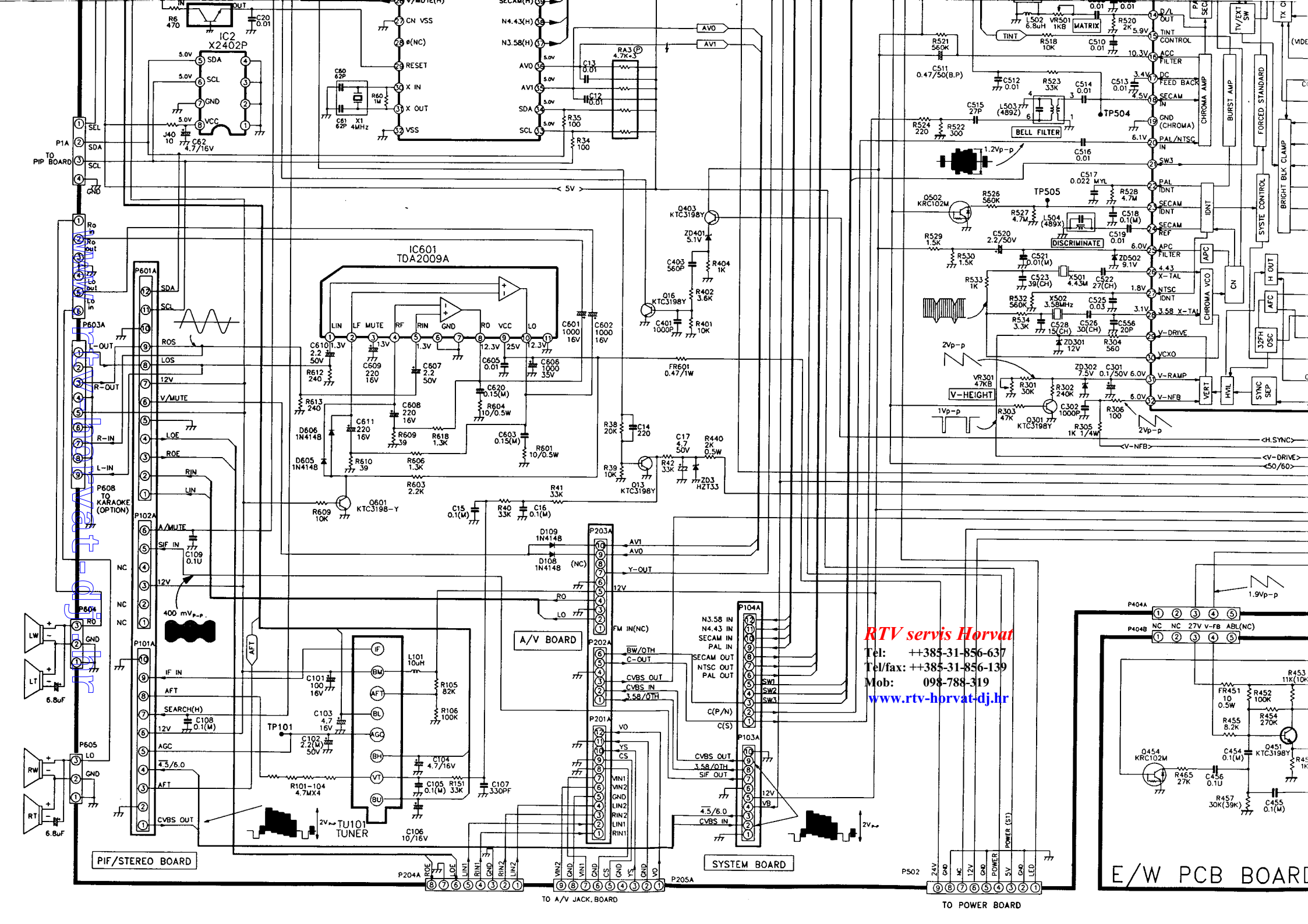
IC2
X2402P
IC601
TDA2009A
A/V BOARD
PIF/STEREO BOARD
SYSTEM BOARD
TO A/V JACK BOARD
TO POWER BOARD
E/W PCB BOARD
TU101
TUNER
TO PIP BOARD
TO KARAOKE (OPTION)
RTV servis Horvat
Tel: ++385-31-856-637
Tel/fax: ++385-31-856-139
Mob: 098-788-319
www.rtv-horvat-dj.hr

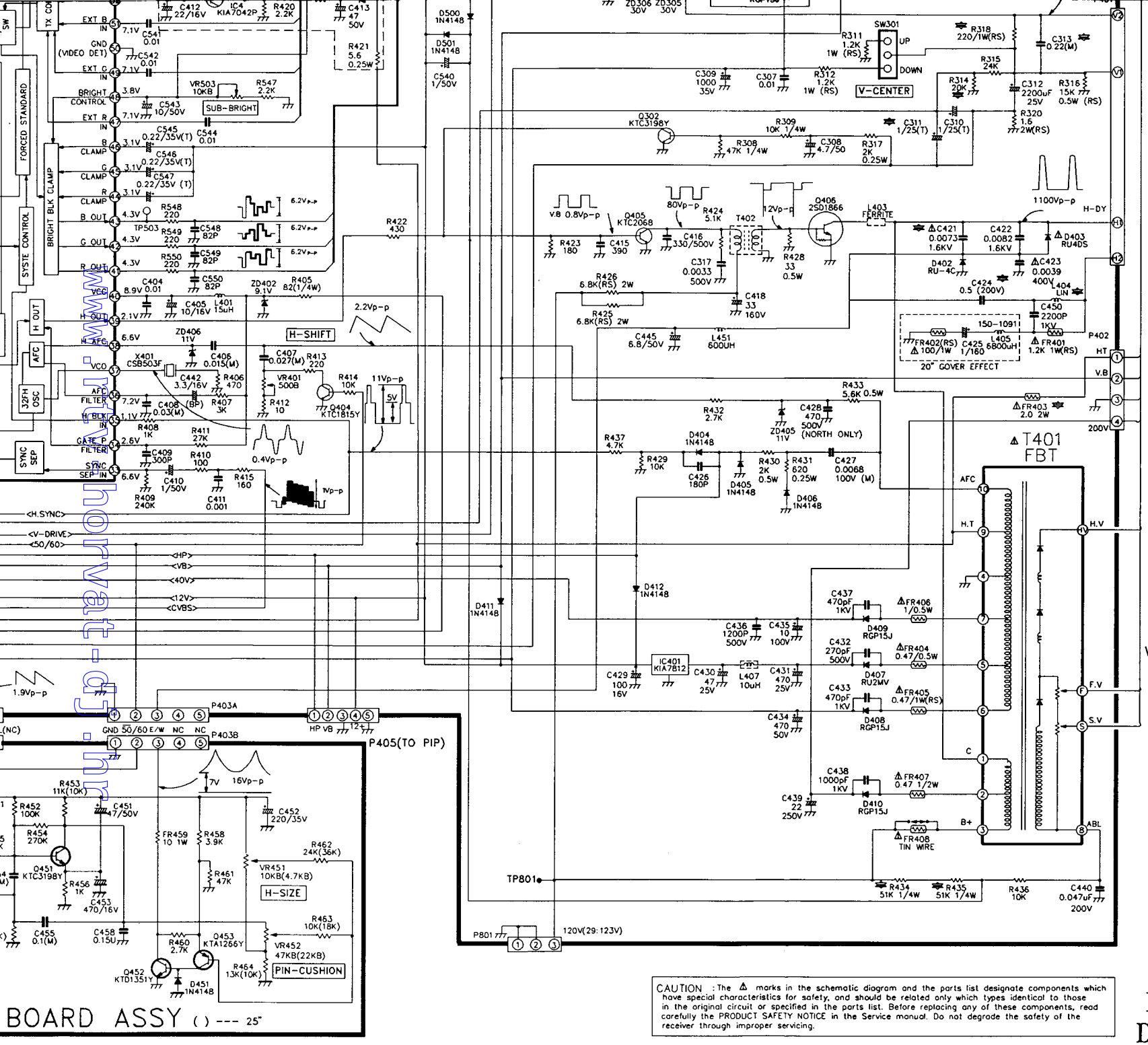

R434	130K	51K		RE FIXED 1/4W
R435	130K	51K		RE FIXED 1/4W
R318	270/1W	220/1W		RE FIX METAL
FR403	2.2/2W	2.0/2W		RE FUSIBL
C305	100/35V	220/35V		CAP ELECT
C311	0.47/35V	1.0/25V		CAP TANTAL
C313	0.15	0.22		CAP POLYE
C421	8200P	7300P		CAP MPP 1.6KV
C424	0.62M	0.5M		CAP MPP 200V
L404	150-840B	150-840A		H-LINEAITY COIL

TABLE OF THE P.I.P FOR OPTION Ⓟ

CIRCUIT NO	WITHOUT P.I.P	WITH P.I.P		REMARK
D8	X	1N4148		DIODE
R412	100	120		RE FIXED 1/6W
R521	330K	560K		RE FIXED 1/6W
RA3	167-040B	167-040K		ARRAY RESISTOR
R29	9.3K	X		RE FIXED 1/6W
R28	2.4K	430		RE FIXED 1/6W
C102	10U/50V	2.2U/50V		CAP ELECT
J28	X	O		TIN WIRE
J78	X	O		TIN WIRE
J178	X	O		TIN WIRE
J280	X	O		TIN WIRE
J232	O	X		TIN WIRE
J233	O	X		TIN WIRE
J234	O	X		TIN WIRE
J235	O	X		TIN WIRE
P1A	X	366-921C		PIN - WAFER (4)
P405	X	366-921D		PIN - WAFER (5)
P503	X	366-921J		PIN - WAFER (10)
X1	X	366-009B		PIN - PLUG
H.SINK	407-D92C	407-P70A		IC 401

NOTICE

Since this is a basic circuit diagram,
The value components and some partical connection
are subject to change for improvement

WARNING

Before servicing this chassis, read the "X-ray Radiation Precaution", "Safety Precaution and Product Safety Notice" in the SVC Manual.

VALUE OF RESISTOR, CAPACITOR and INDUCTOR

1. Resistance is shown in ohm, k=1,000
2. Unless otherwise noted in schematic, all capacitor values less than 1 are expressed in uF and the values more than 1 in pF.
3. Unless otherwise noted in schematic, all inductor values more than 1 are expressed in uH, and the values less than 1 in mH.

OBSERVATION OF VOLTAGES AND WAVEFORMS

1. Voltages read with VTVM form point shown to chassis ground, line voltage AC100 – 270V volts, color bar signal.
2. Voltages reading may vary ±20%
3. The schematic shown is representative only.
4. All waveforms, are taken using a wide band oscilloscope and a low capacity probe.
5. Waveforms are taken using a standard colour bar signal.

CAUTION : The ⚠ marks in the schematic diagram and the parts list designate components which have special characteristics for safety, and should be related only which types identical to those in the original circuit or specified in the parts list. Before replacing any of these components, read carefully the PRODUCT SAFETY NOTICE in the Service manual. Do not degrade the safety of the receiver through improper servicing.

P/N : 484-828G (1/2)
DATE : JUL, 5. 1994

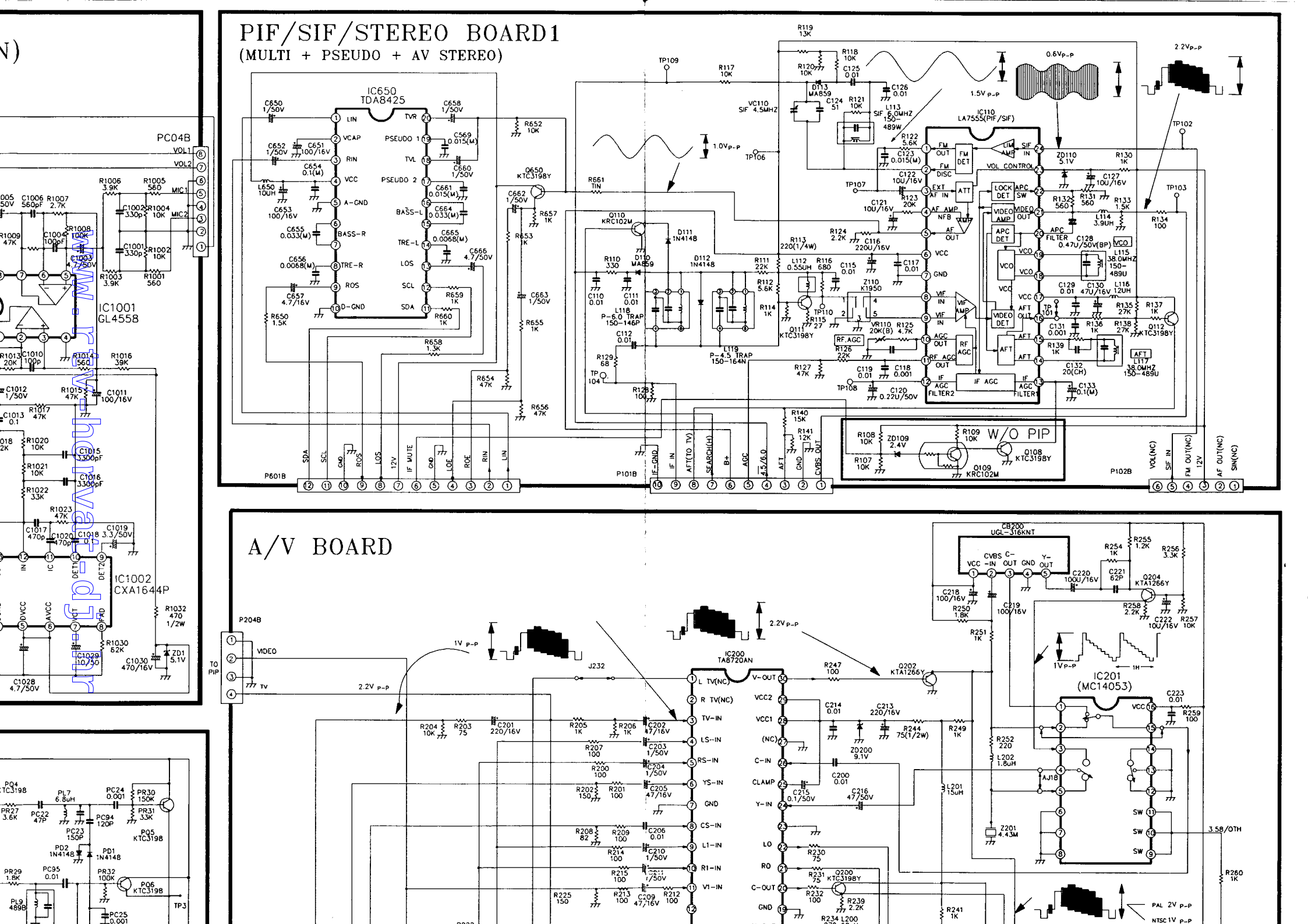
PIF/SIF/STEREO BOARD1
(MULTI + PSEUDO + AV STEREO)
IC650
TDA8425
IC110
LA7555(PIF/SIF)
W/O PIP
A/V BOARD
IC200
TA8720AN
IC201
(MC14053)
IC1001
GL4558
IC1002
CXA1644P
PC04B
P601B
P101B
P102B
P204B

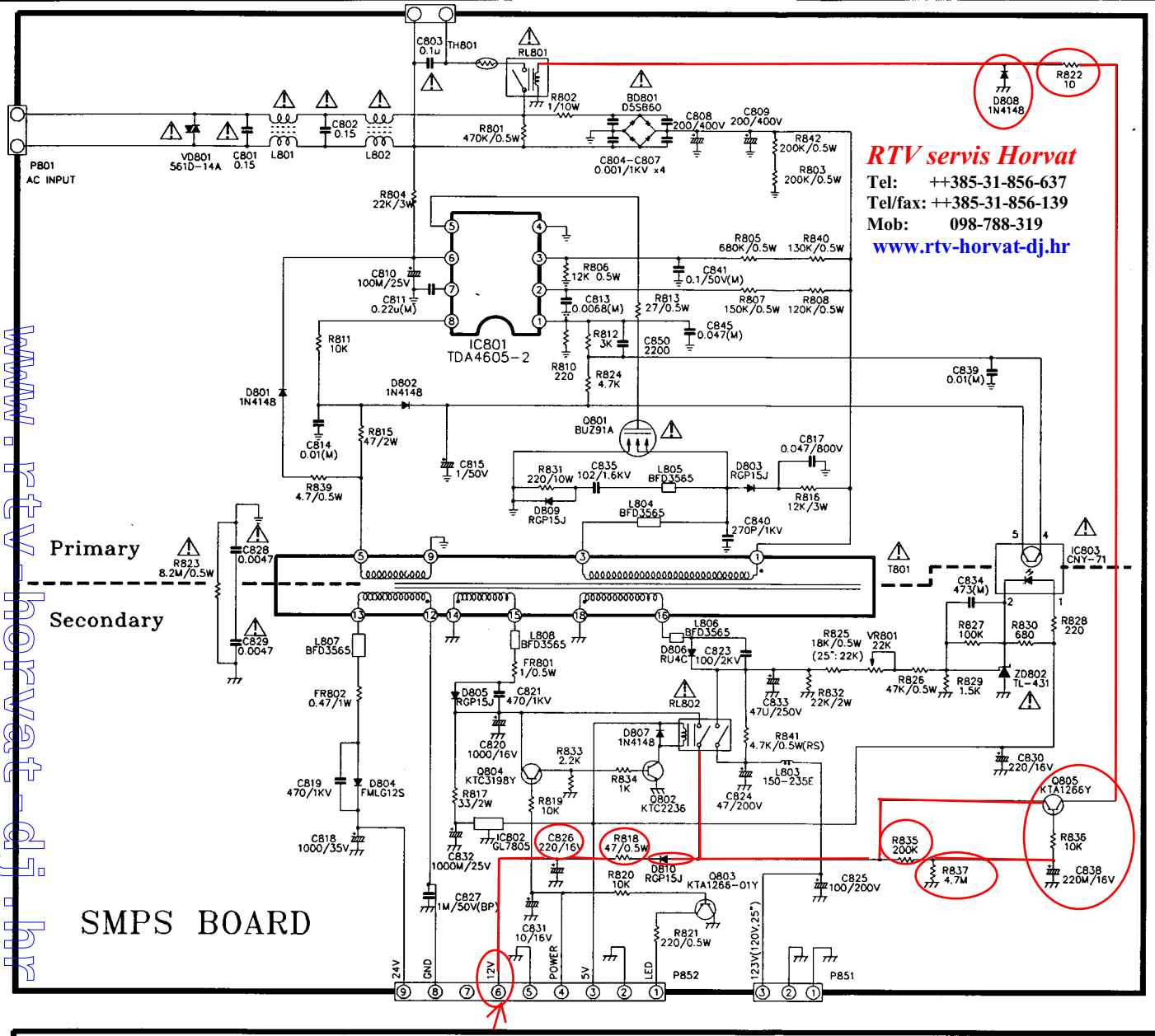

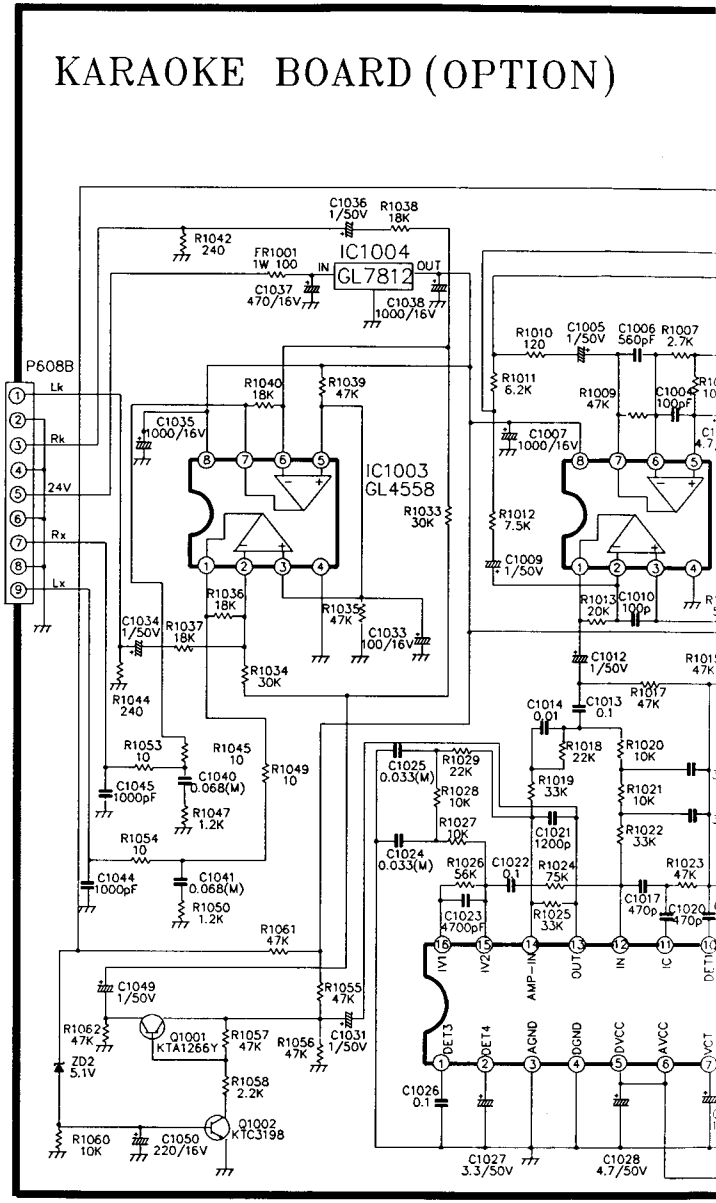

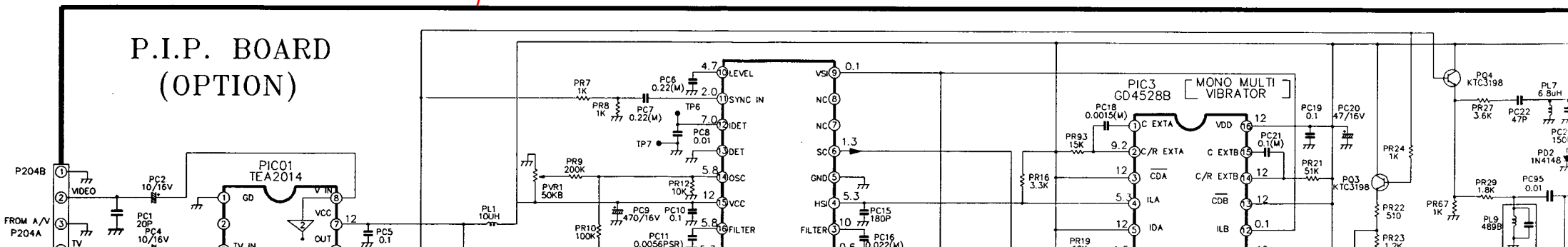

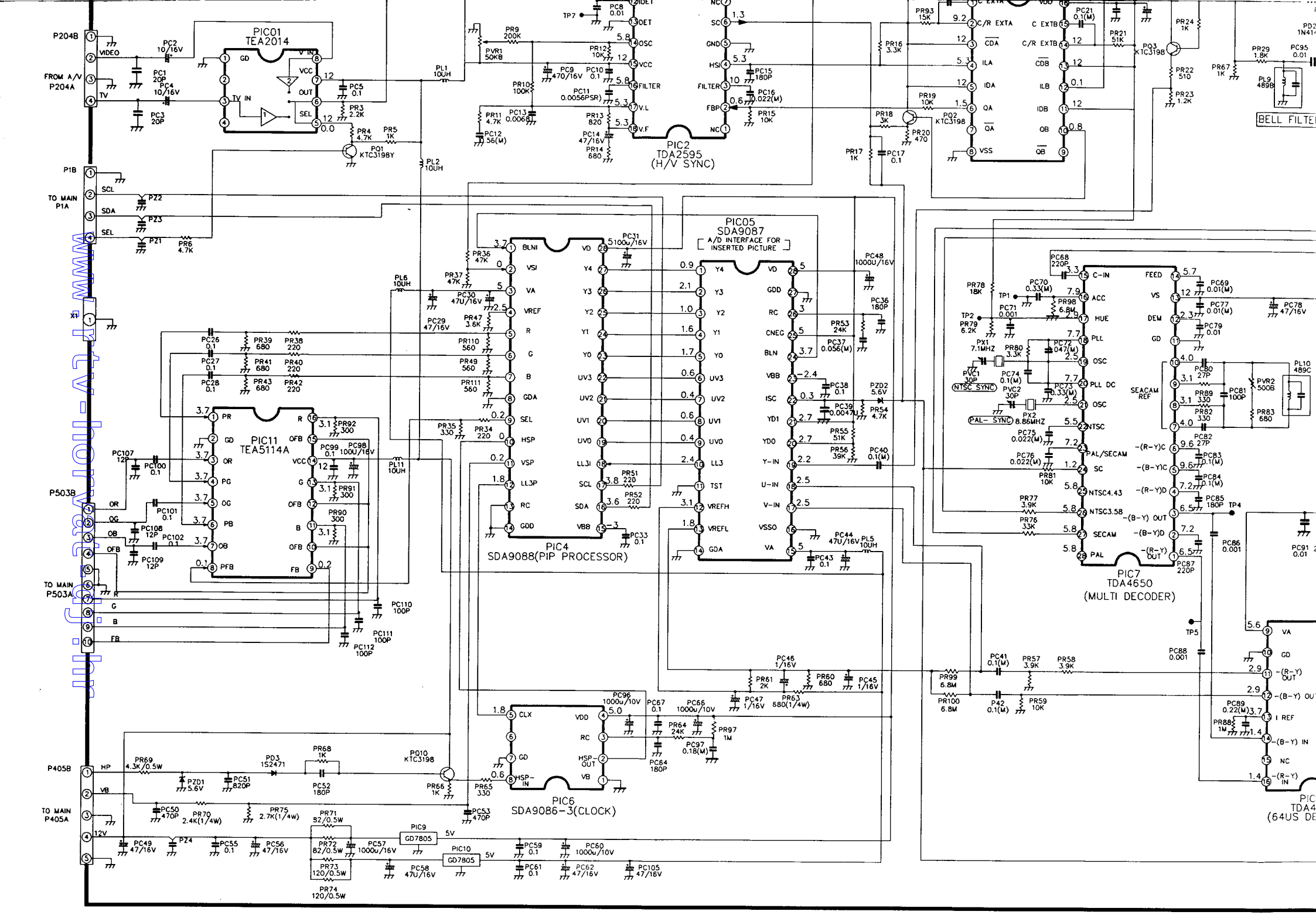
PIC01
TEA2014
PIC2
TDA2595
(H/V SYNC)
PIC05
SDA9087
A/D INTERFACE FOR INSERTED PICTURE
PIC4
SDA9088(PIP PROCESSOR)
PIC11
TEA5114A
PIC7
TDA4650
(MULTI DECODER)
PIC6
SDA9086-3(CLOCK)
BELL FILTER
P204B
FROM A/V P204A
P1B
TO MAIN P1A
P503B
TO MAIN P503A
P405B
TO MAIN P405A
NTSC SYNC
PAL- SYNC

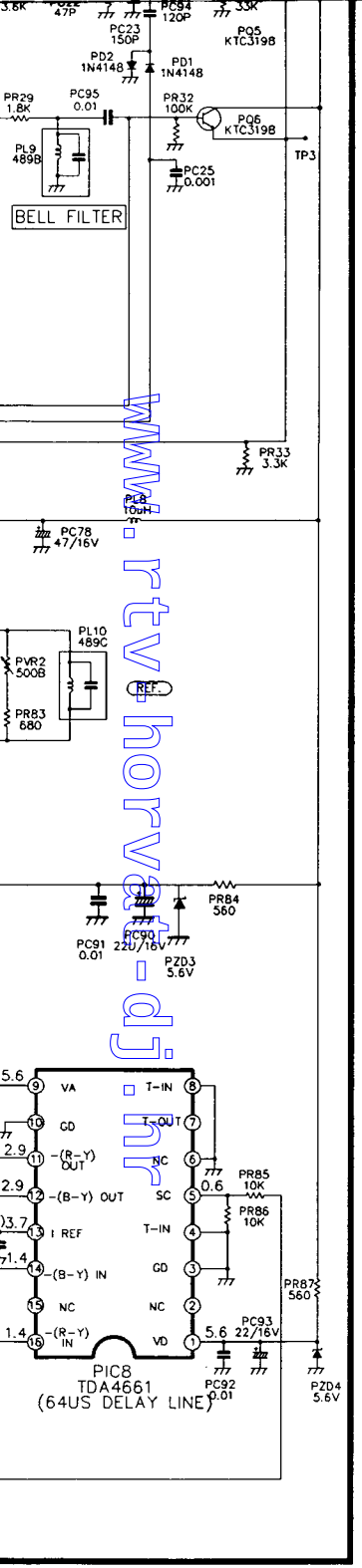

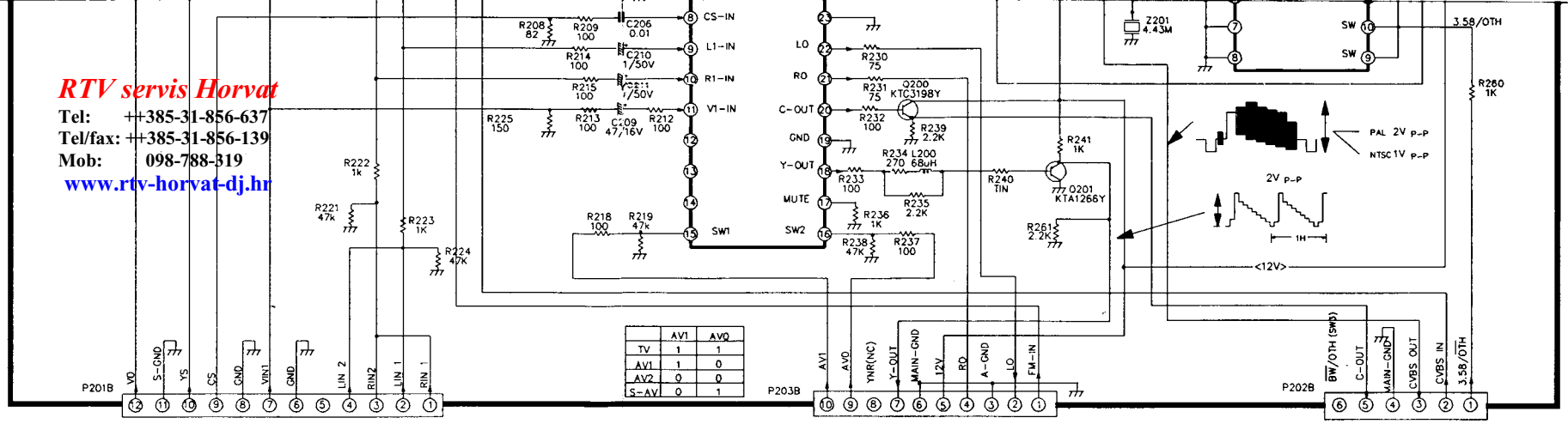

	AV1	AVO
TV	1	1
AV1	1	0
AV2	0	0
S-AV	0	1

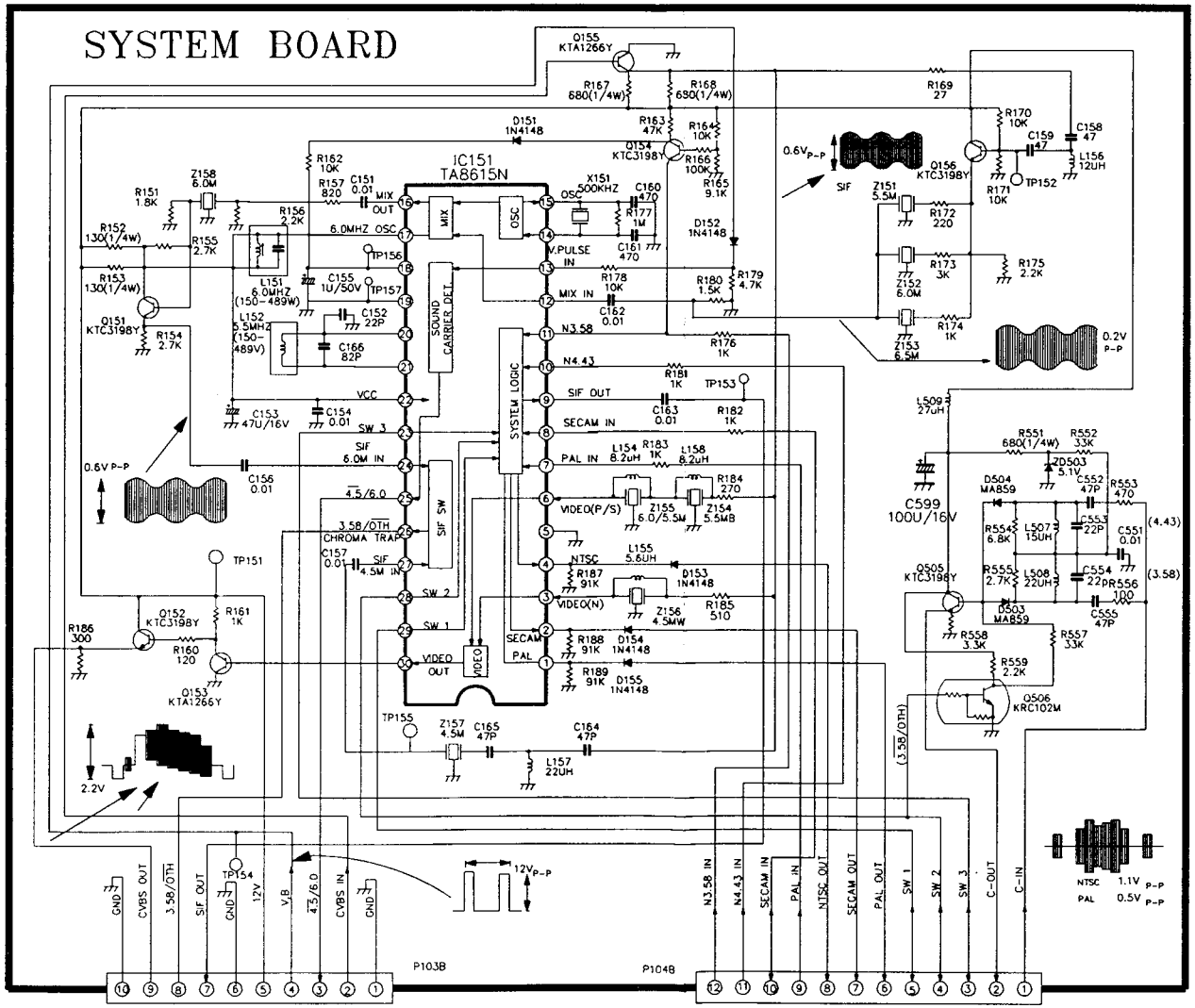

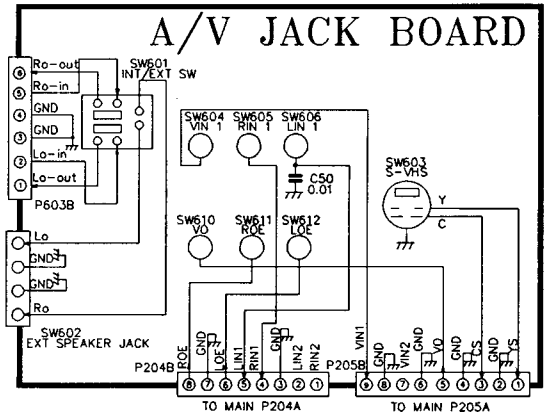

TABLE OF THE P.I.P. (OPTION)

CIRCUIT NO	WITHOUT P.I.P	WITH P.I.P 25 INCH	WITH P.I.P 29 INCH	REMARK
	PIF/SIF/STEREO BOARD			
ZD109	2.4V	X	X	ZENER DIODE
R107	10K	X	X	RE FIXED 1/6W
R108	10K	X	X	RE FIXED 1/6W
R109	10K	X	X	RE FIXED 1/6W
Q108	KTC-3198	X	X	TRANSISTOR
Q109	KRC102M	X	X	TRANSISTOR
VJ1	O	X	X	TIN WIRE
VJ2	O	X	X	TIN WIRE
VJ30	O	X	X	TIN WIRE
R658	1.5K	1.3K	1.3K	RE FIXED 1/6W
	A/V BOARD			
P204	X	170-807H	170-807H	FLATE WIRE
R202	82	150	150	RE FIXED 1/6W
R225	82	150	150	RE FIXED 1/6W
R261	X	2.2K	2.2K	RE FIXED 1/6W
	P.I.P BOARD			
PC50		470P	820P	

P/N : 484-828G (2/2)
DATE : JUL, 5. 1994