service manual

DTT1609

CONTENTS

Main Board

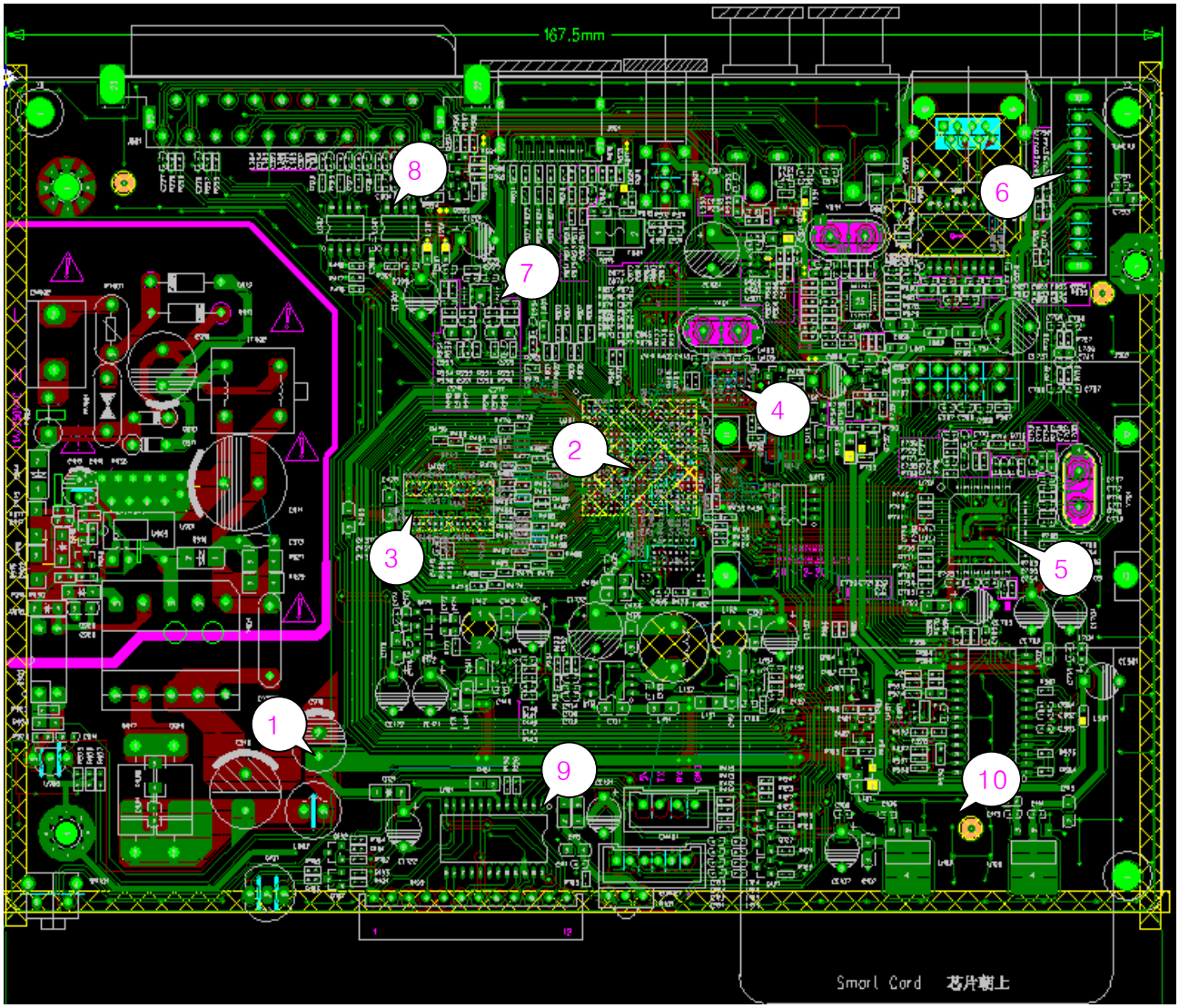

Main Board Trouble Shooting Guide
(DTT1609)
Here are the procedures you can refer to whenever terrestrial receivers do not operate properly. You can check problems and repair the units on the basic level according to the following procedures

1. SHORT TEST

☞Before turning on AC power, check POSITIVE VOLTAGE and also check whether SHORT between GROUND's and PIN SHORT for TUNER are detected or not.

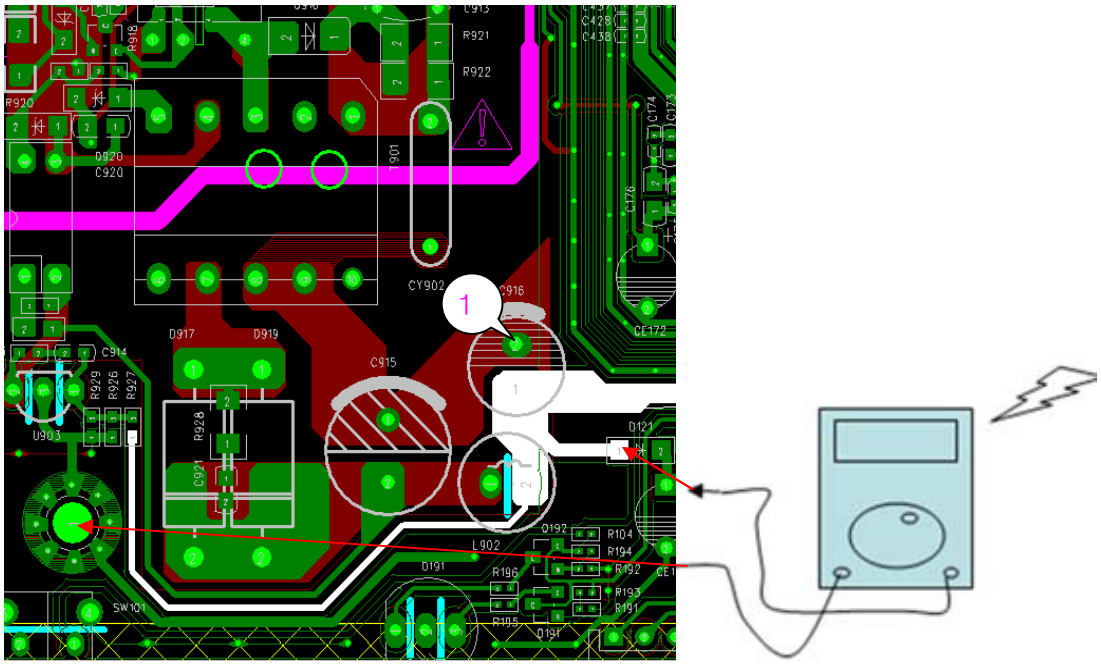

2. Checking POWER.

☞ +12V(SCART), +5V(ANTENNA_POWER, IR, VIDEO BUFFER, HDMI, USB), +3.3V(TUNER, FLASH, CPU), +2.5V(DEMOD), +1.5V(DDR3, CPU), +1.3V(CPU DEMOD)

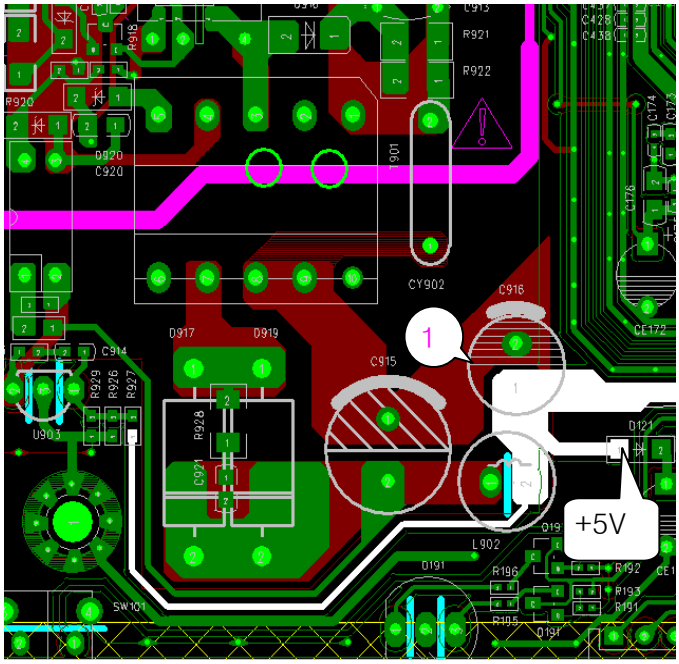
1
+5V

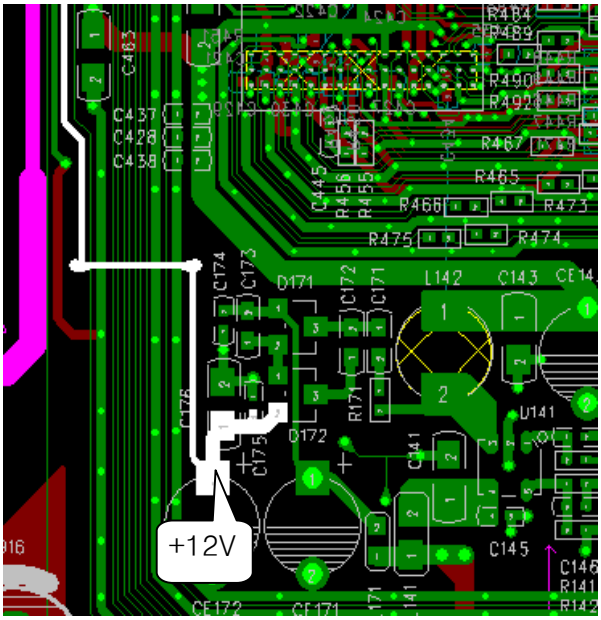
+12V

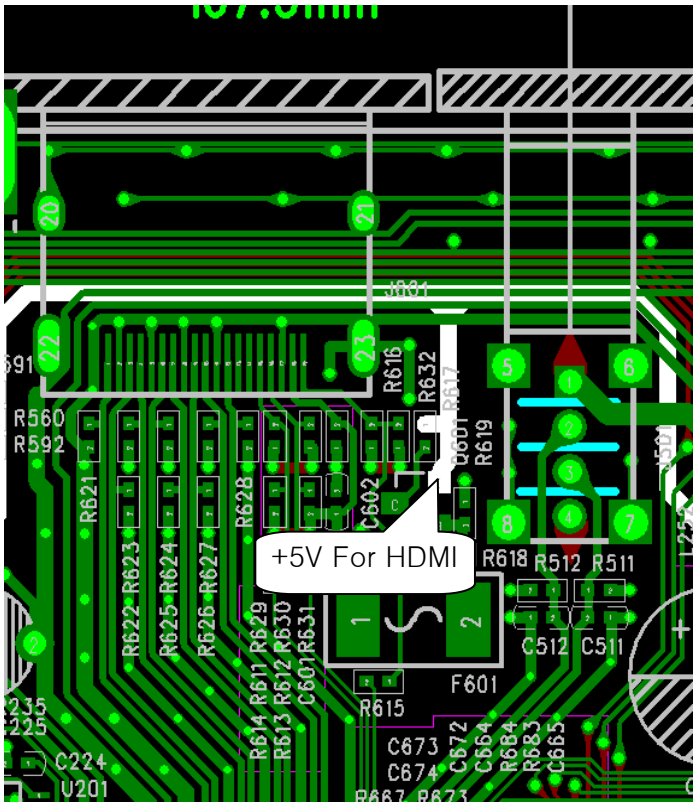
+5V For HDMI

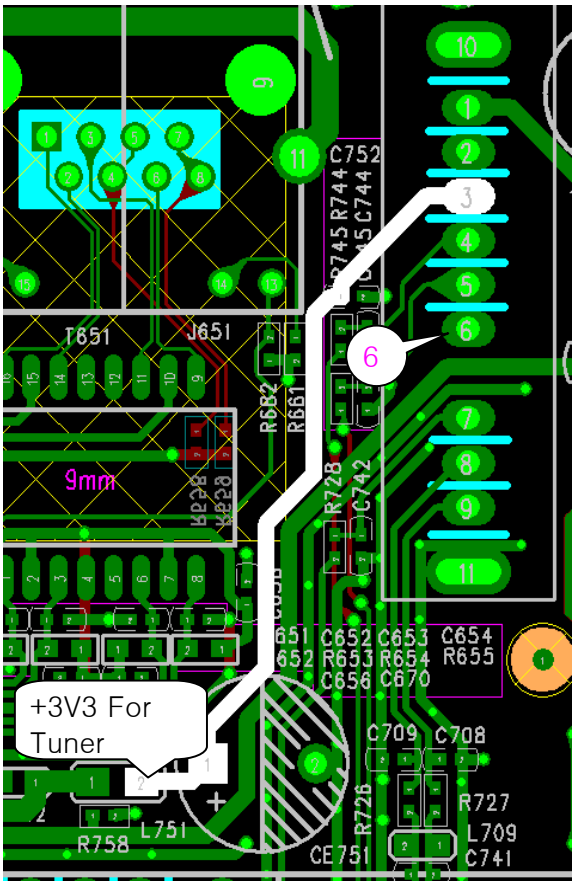
6
9mm
+3V3 For
Tuner

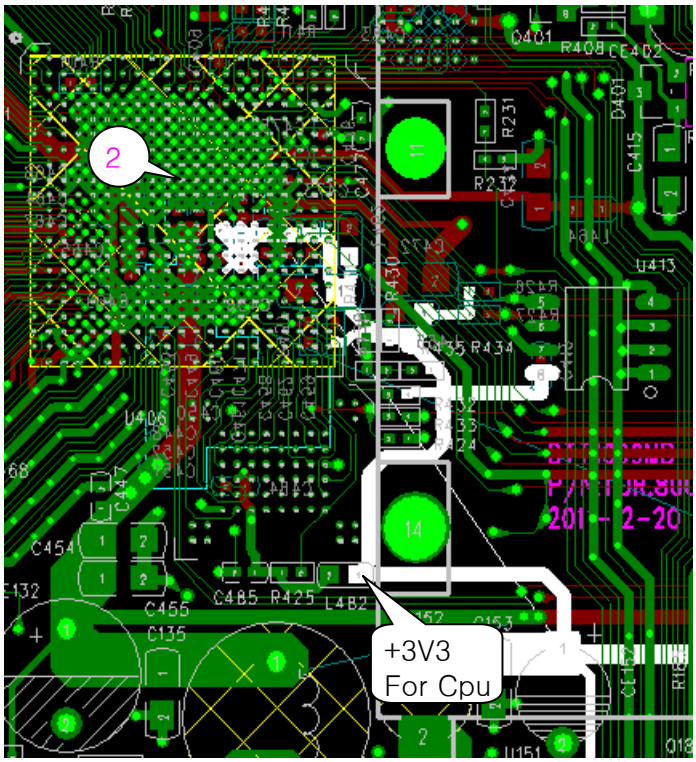
2
+3V3
For Cpu

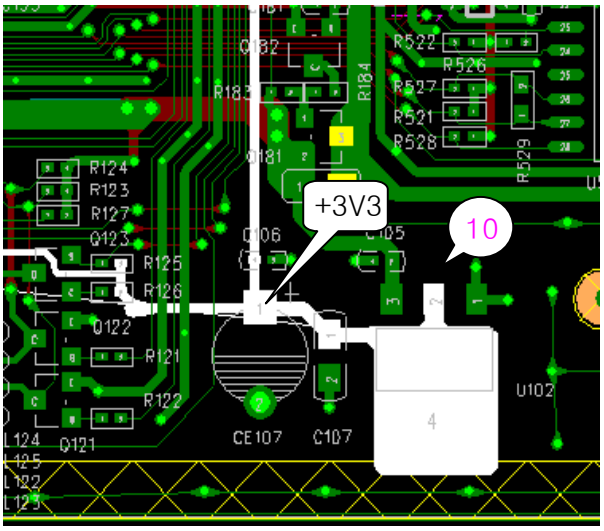
+3V3
10

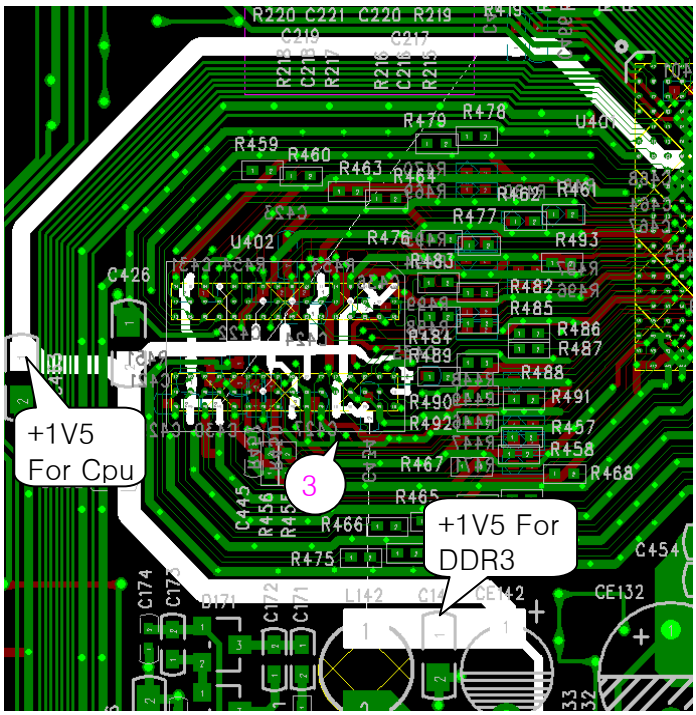
+1V5
For Cpu
3
+1V5 For
DDR3

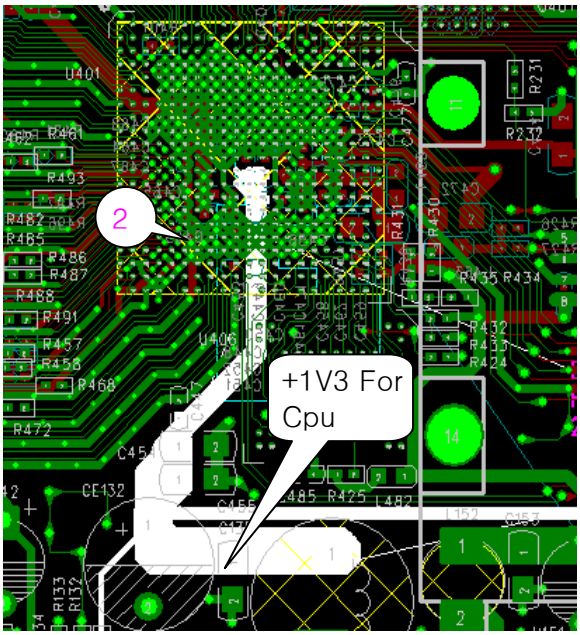
2
+1V3 For
Cpu

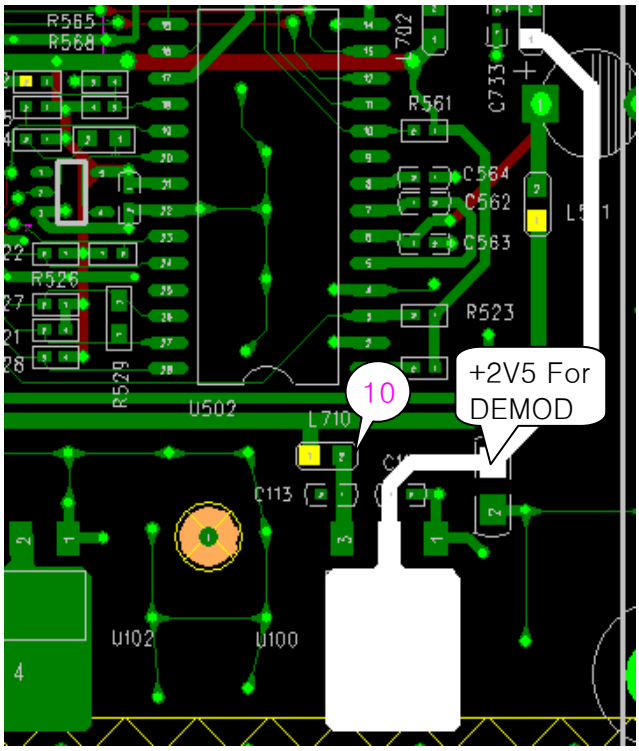
10
+2V5 For DEMOD

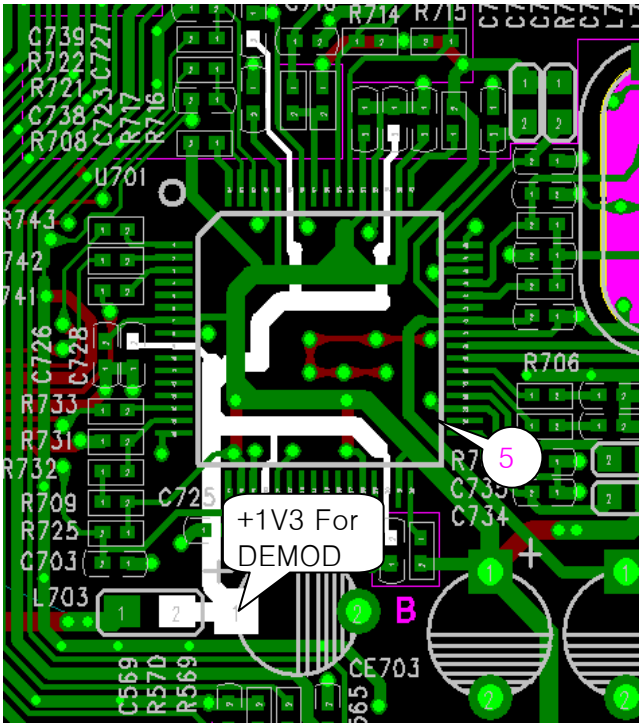
5
+1V3 For DEMOD

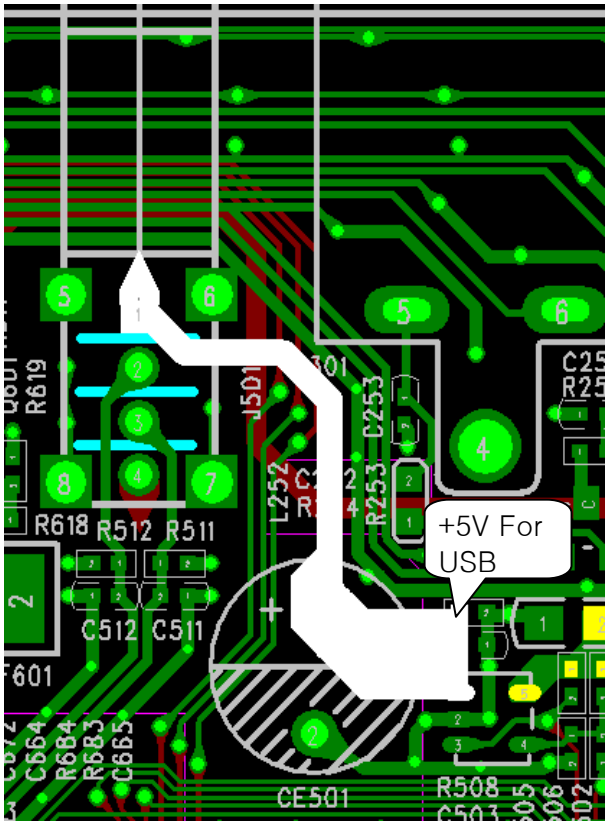
+5V For USB

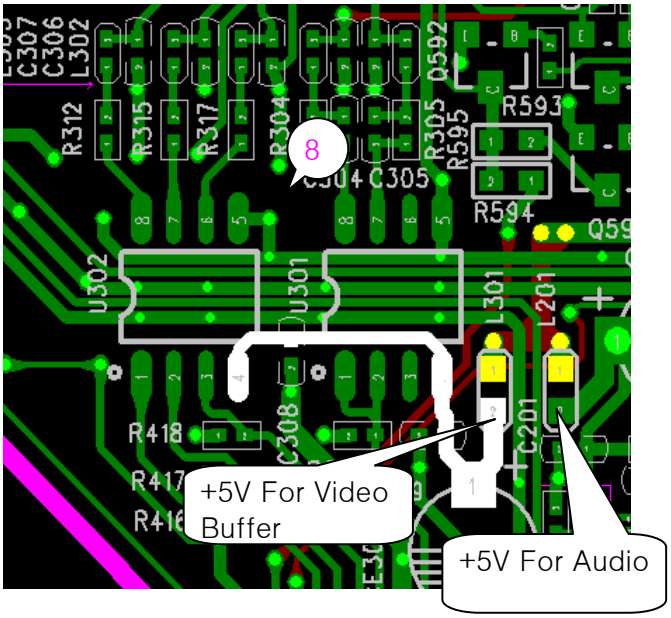
8
+5V For Video Buffer
+5V For Audio

3. Check MAIN CLOCK 24MHz and SYSTEM CLOCK (PLL) to operate normally after SYSTEM operates.

☞For the first thing, check 24MHz from Y401 flows into [OSCI(PIN B18)] of MAIN CPU

If the 24MHz is unstable, Check Y401 is damaged or not.

If you are firm belief of damage for the device, then replace the device.

☞ And then, check that 800MHz is being supplied to DDR3 with RESET

If the clock 800MHz on Pin-J7&K7 of U401 is not generated from inside of the chip,Please check the soldering state of U401,U402 and U403

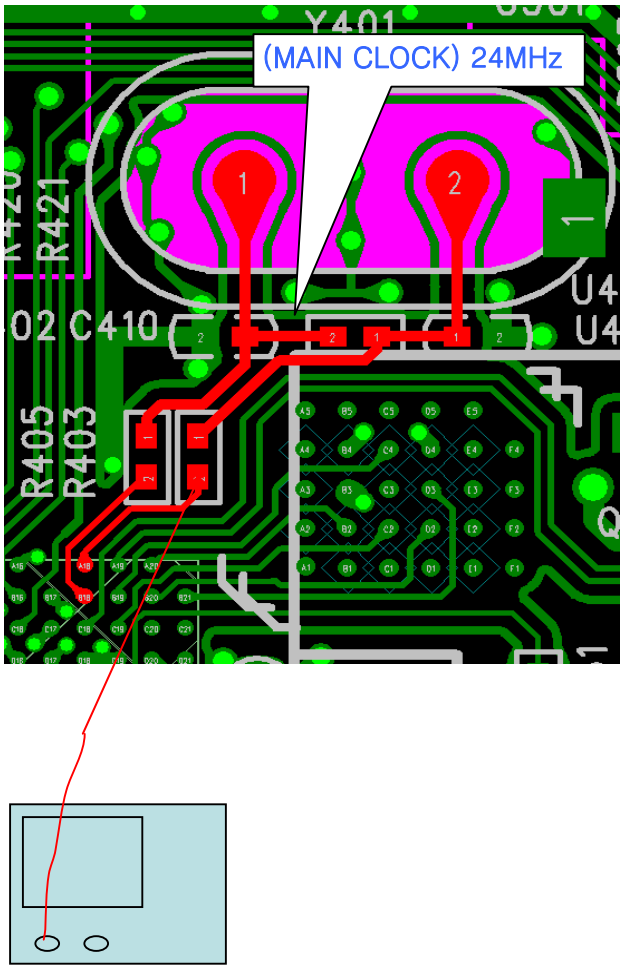

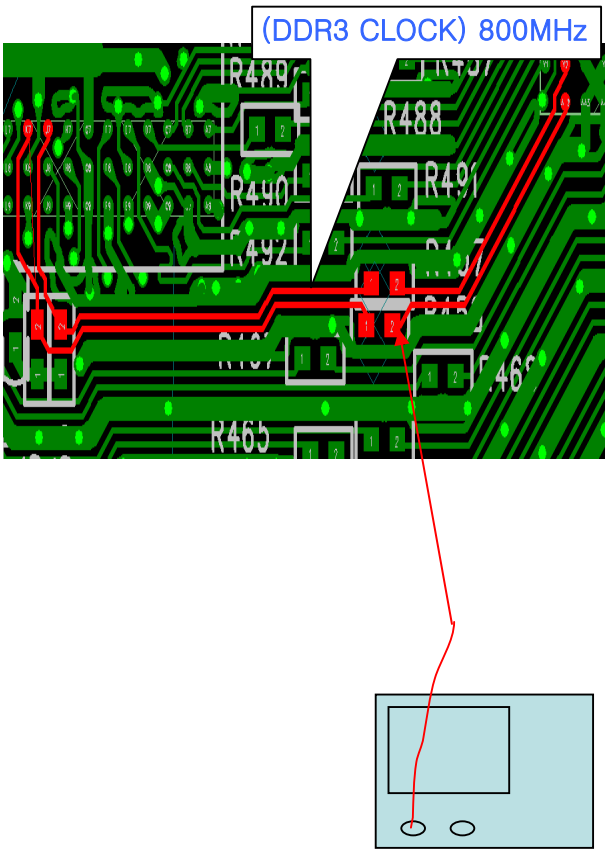

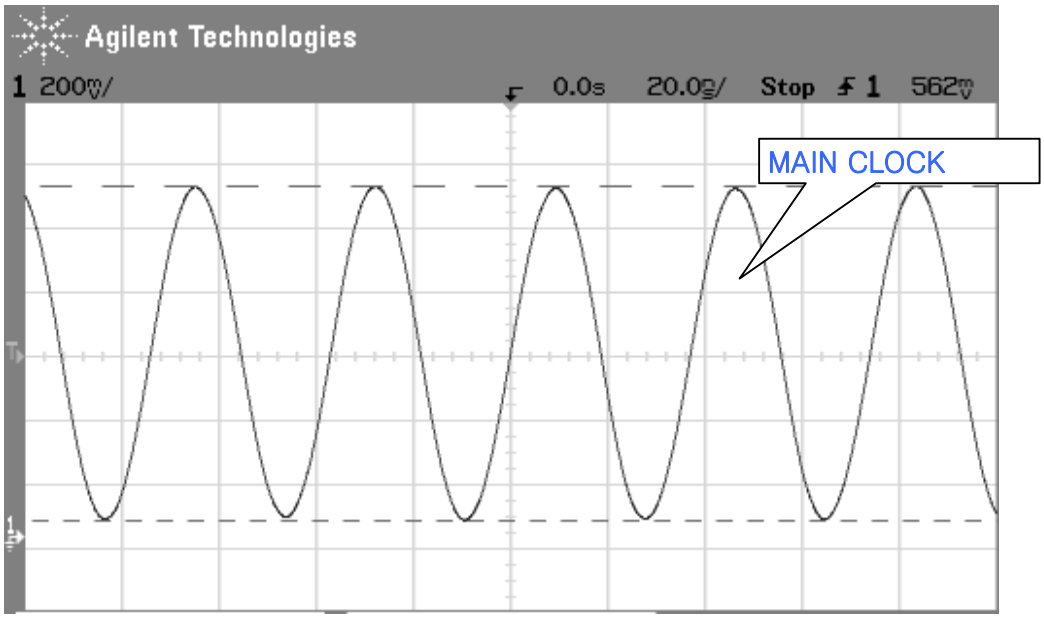
Agilent Technologies
1 200mV/
0.0s
20.0s/
Stop
1
562mV
MAIN CLOCK

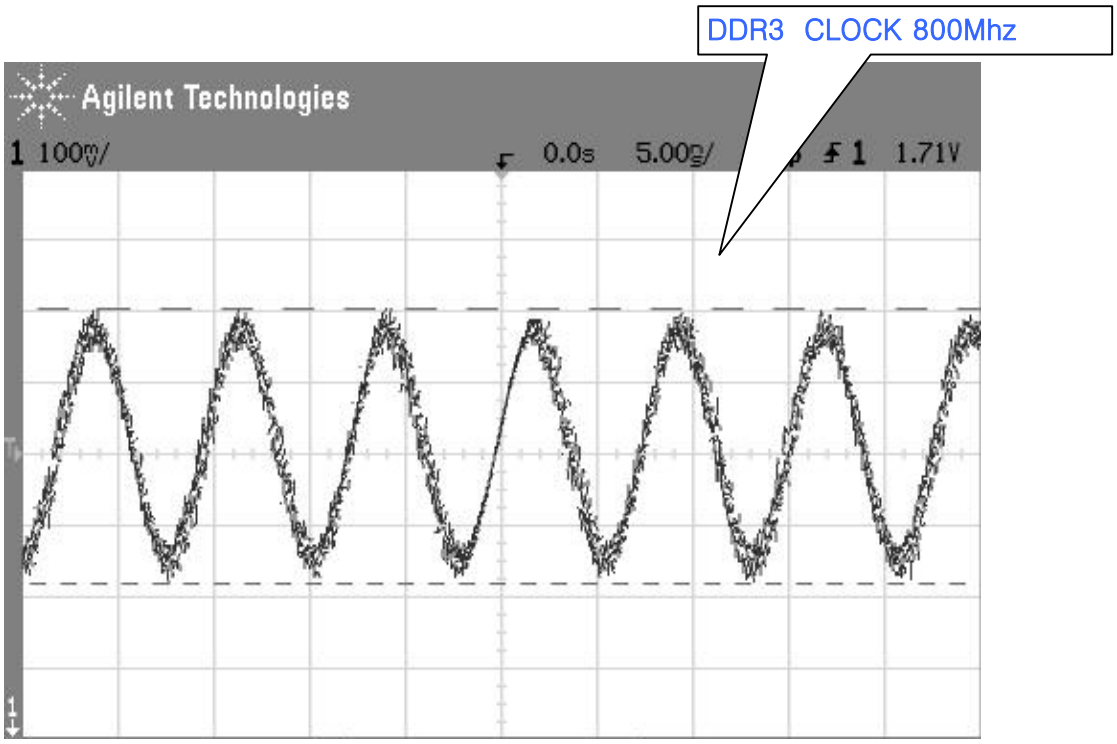
DDR3 CLOCK 800Mhz
Agilent Technologies
1 100mV/
0.0s
5.00s/
1
1.71V

4. In case that MAIN CPU operates normally but there is no VIDEO display.

▶ In case of no OSD display.

☞ If OSD is not displayed, check first if VIDEO SIGNAL is detected from [R419(CVBS),R416(R),R417(G),R418(B)] of MAIN CPU.

☞ And then, check any part with no DATA after checking VIDEO SIGNAL from VIDEO SIGNAL PORT of MAIN CPU, or SCART

▶ In case of no MPEG display

☞ There can be a variety of reasons for the case

☞ Check first that CHANNEL of TP SIGNAL is locked properly.

☞ After this signal input to the resistor connected to MAIN CPU is done normally, A/V DATA comes out from MAIN CPU and flows into MPEG CHIP(MAIN CPU). If there is no problem to here, it is thought that MAIN CPU and channel are operating without any fault.

☞ In case of no MPEG display to this point, inspect any disorder by checking U701(TUNER IC) and I/F of MAIN CPU.

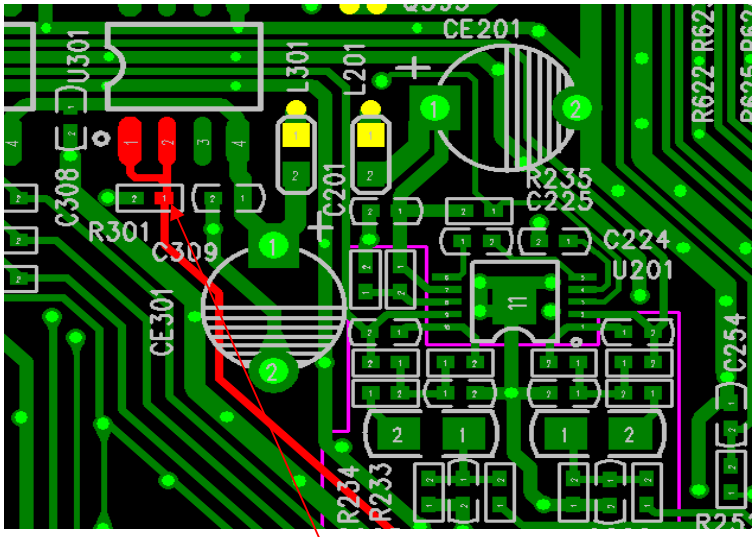

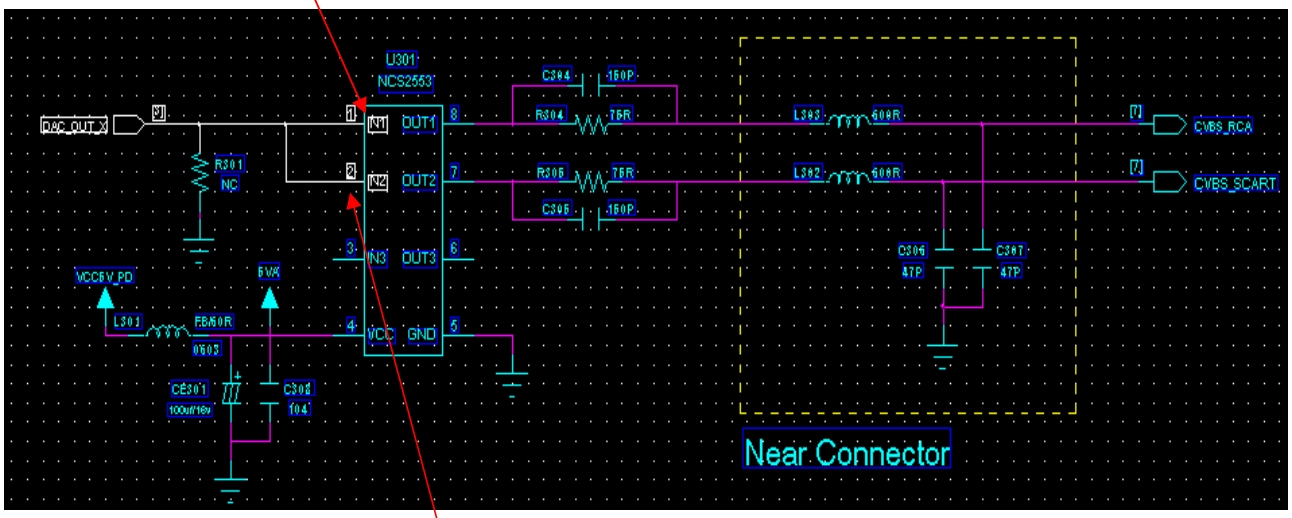

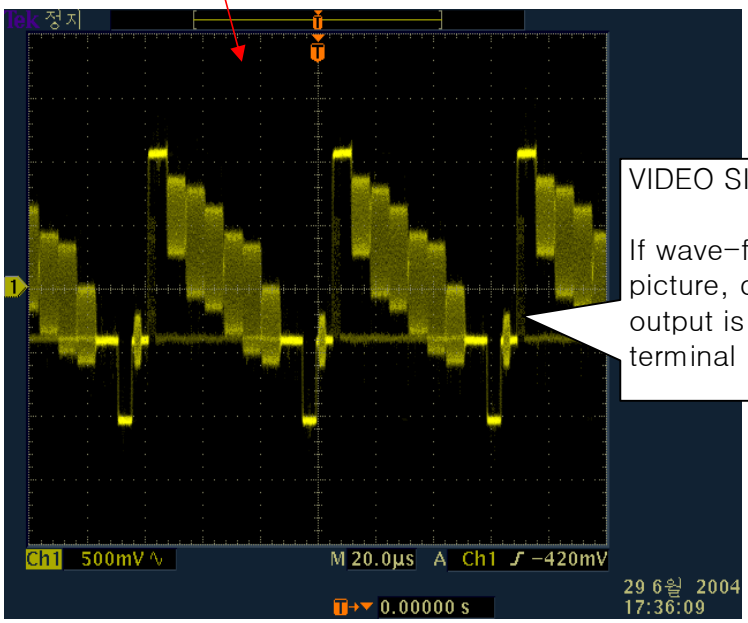

VIDEO SIGNAL

If wave-form is not like this picture, check that wave-form output is normal from each terminal

5. In case of no MPEG and no OSD at the same time.
☞ Check that 1Vp_p(0.7Vp_p for RGB) comes out normally from VIDEO PART(CVBS) of MAIN CPU.

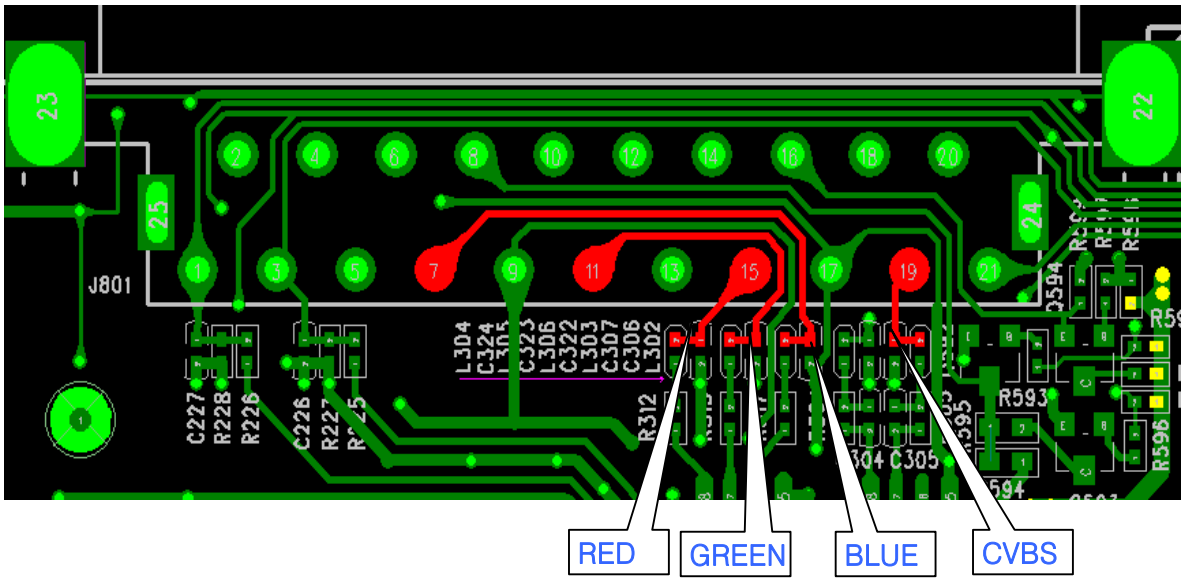

7. In case of normal VIDEO SIGNAL flowing out but abnormal AUDIO SIGNAL.
☞ Check that ADAC_L(U201 PIN2),ADAC_R(U201 PIN9) signals have normal inputting and outputting from MAIN CPU. The signal is linked to SCART.

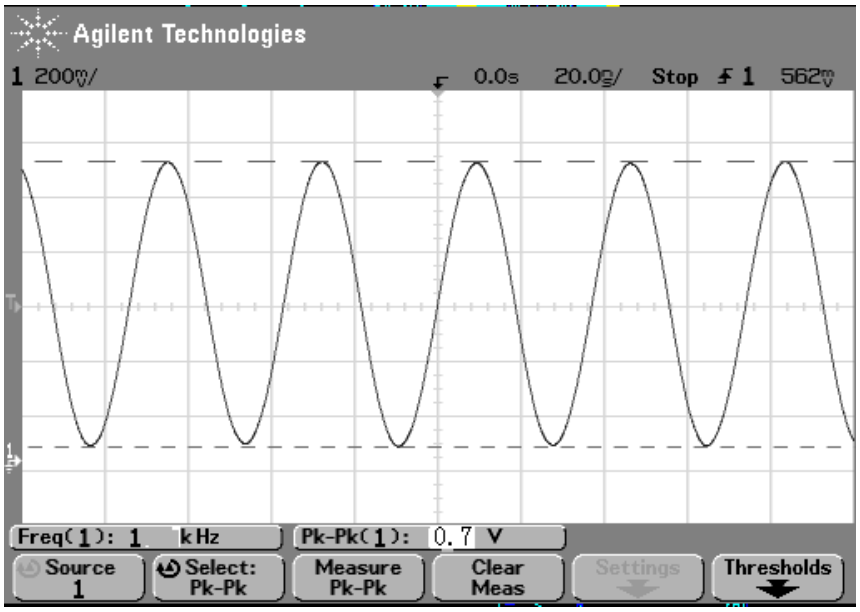

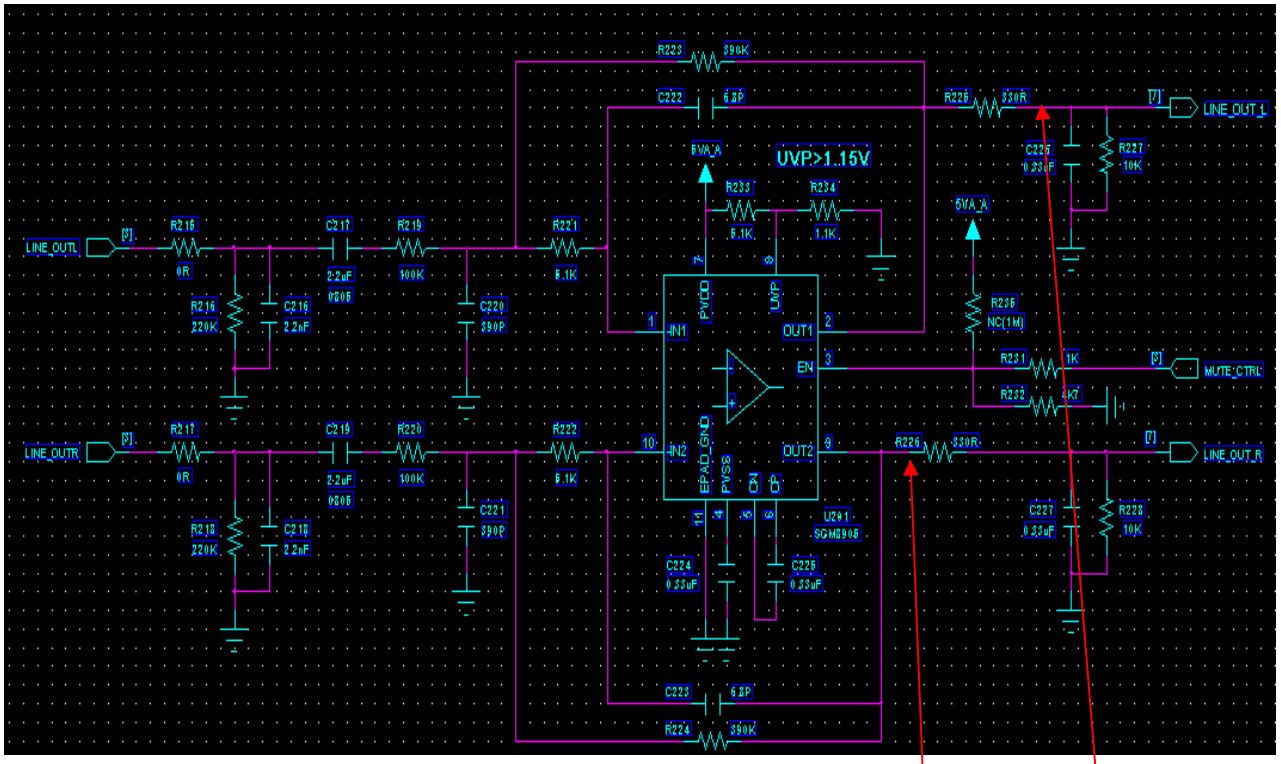
UVP>1.15V
LINE_OUTL
LINE_OUTR
LINE_OUT_L
LINE_OUT_R
MUTE_CTRL
5VA_A
R223 390K
C222 6.8P
R226 330R
R227 10K
C226 0.33uF
R233 5.1K
R234 1.1K
R235 NC(1M)
R231 1K
R232 4K7
R215 0R
C217 2.2uF 0805
R219 390K
R221 5.1K
R216 220K
C216 2.2uF
C220 390P
R217 0R
C219 2.2uF 0805
R220 390K
R222 5.1K
R218 220K
C218 2.2uF
C221 390P
PVDD
UVP
IN1
OUT1
EN
IN2
OUT2
EPAD_GND
PVSS
U261
SGM8906
C224 0.33uF
C228 0.33uF
C227 0.33uF
R228 10K
C223 6.8P
R224 390K

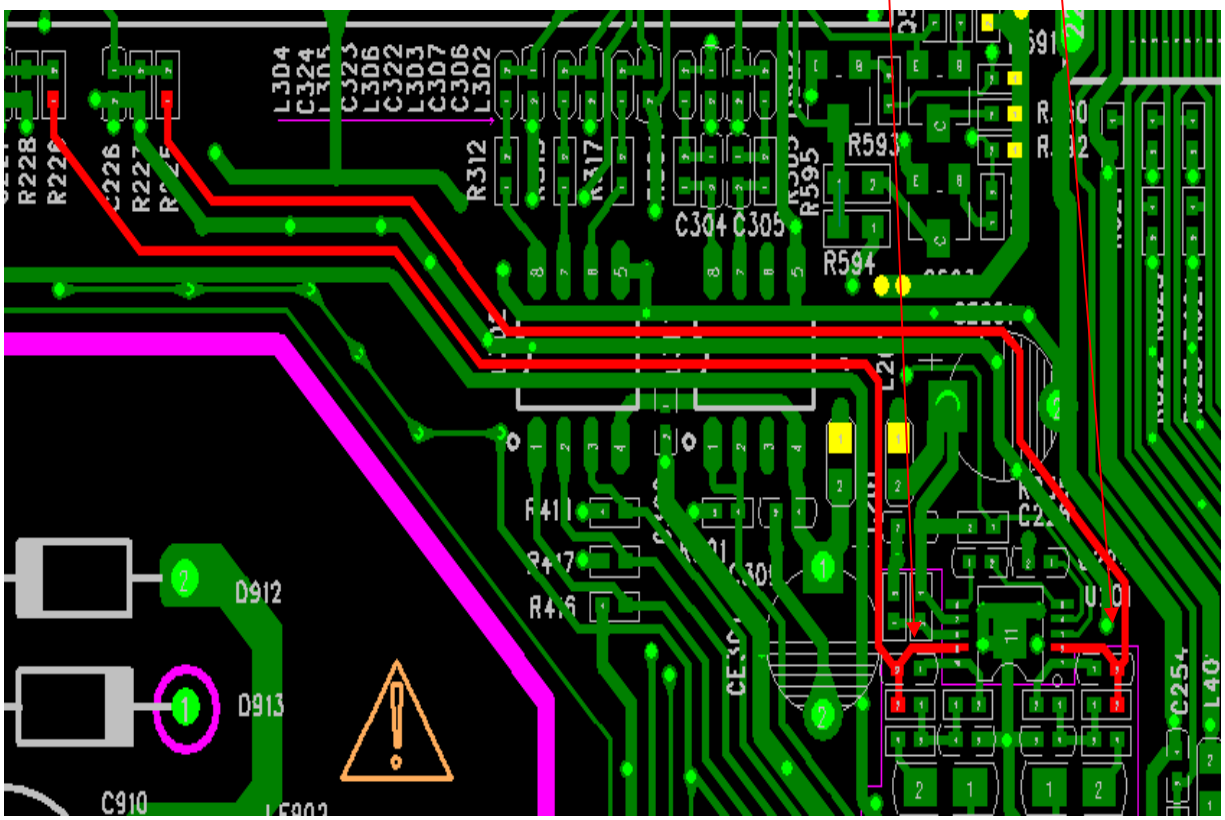
R228
R226
R227
L304
C324
L323
L306
C322
L303
C307
C306
L302
R312
R317
R593
R595
R594
C304 C305
R411
R417
D912
D913
C910
C254

ADDITIONAL TROUBLESOOTHING

1) STAND-BY mode on Set.
Ordinarily, STAND-BY mode results from SHORT on LNB. Check first if TR on LNB has stopped, and then in case that STAND-BY mode resulted from wrong software, down-load a proper software.

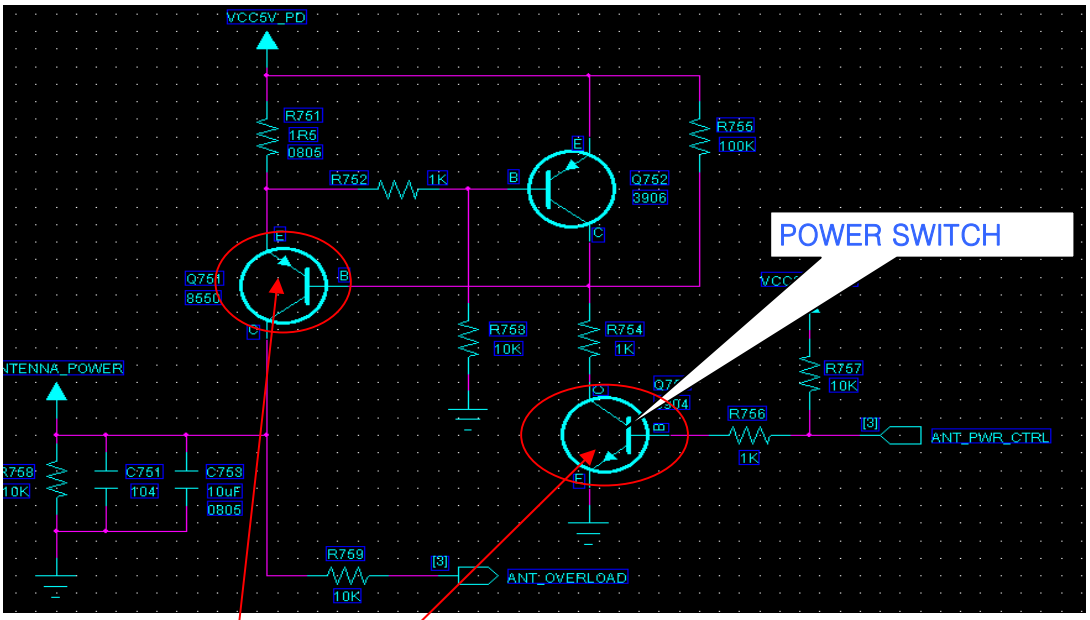

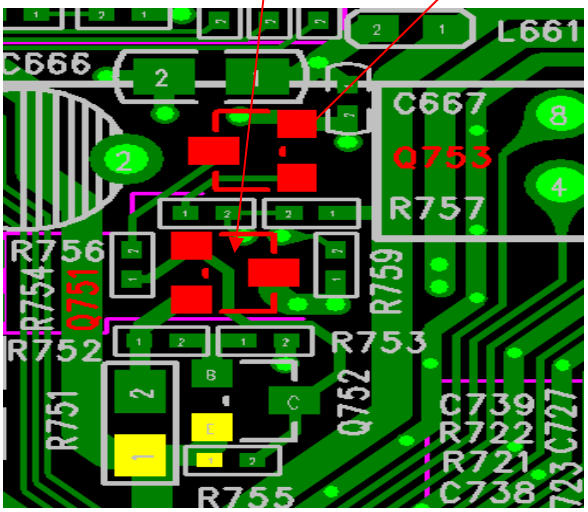

There is a TR's as a switching role on the LNB bundle. 5V comes out normally from Q751. If voltage is not enough or steady, check if the voltage is impressed properly from Q751.

2) Screen problem in color
If you have Black-and-White screen. It mainly results from distorted 24MHz frequency. In case of no screen display or different color displayed, it also mainly results from the Y401 problem. Additionally, in case that the screen display works but is with one color only, for example blue, green, or red, it mainly results from software fault(possiblely detected only on RGB TV).

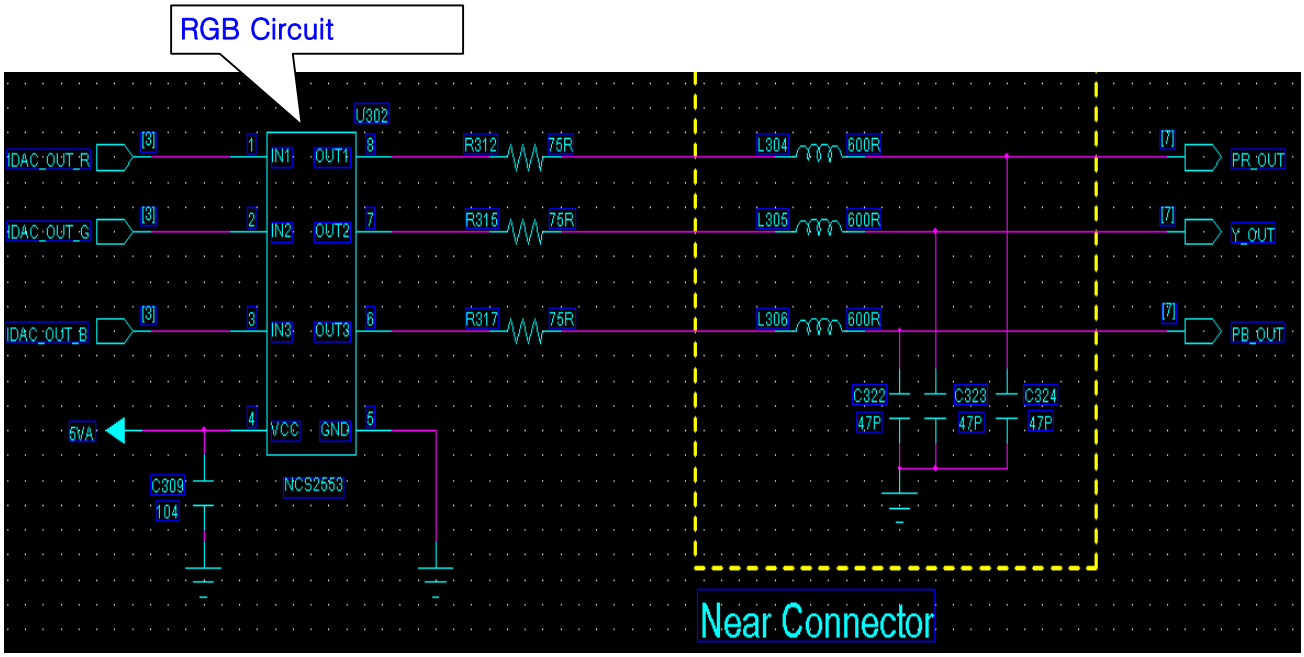

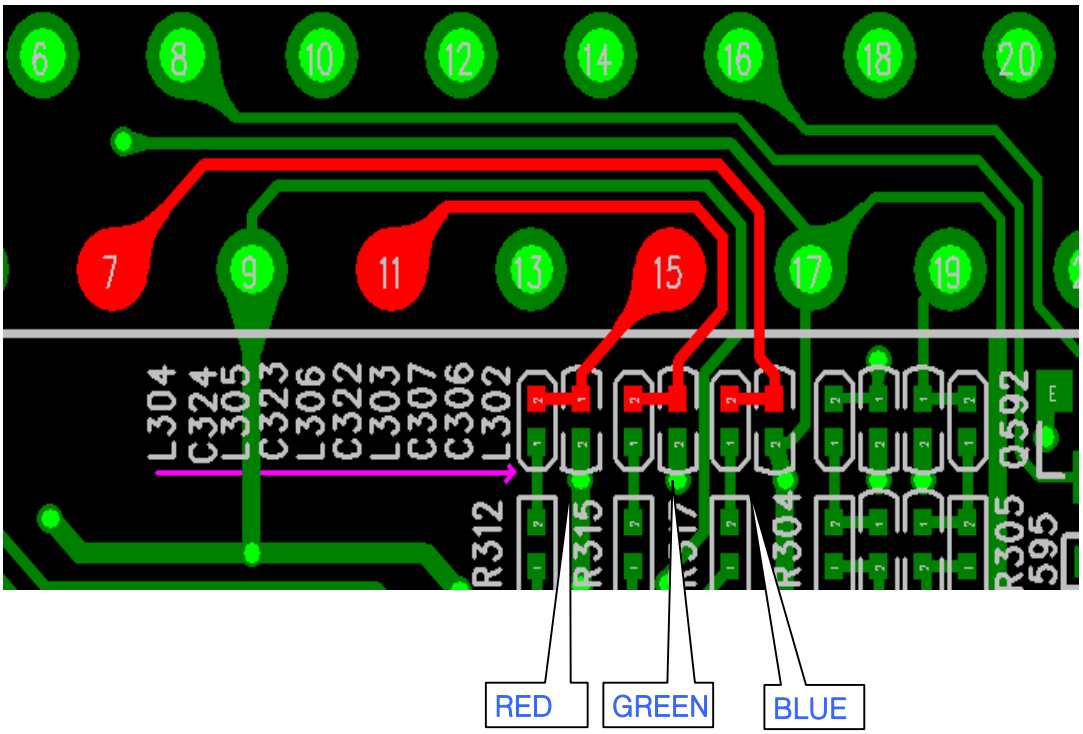

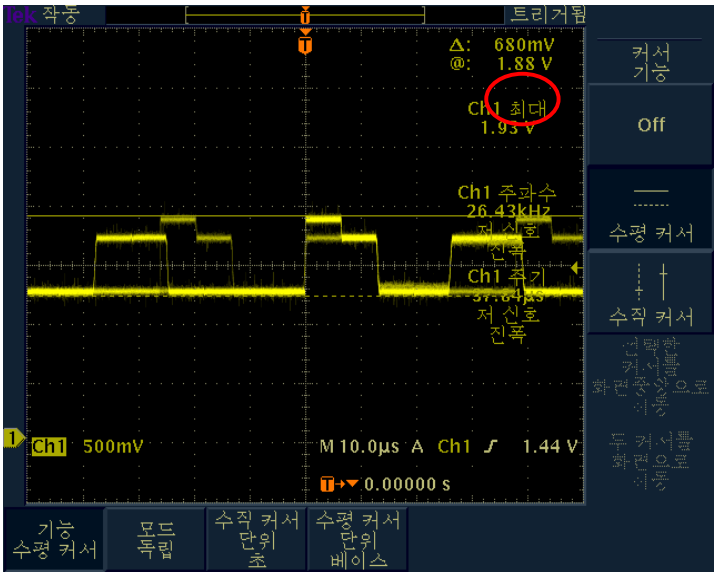

Red signal input

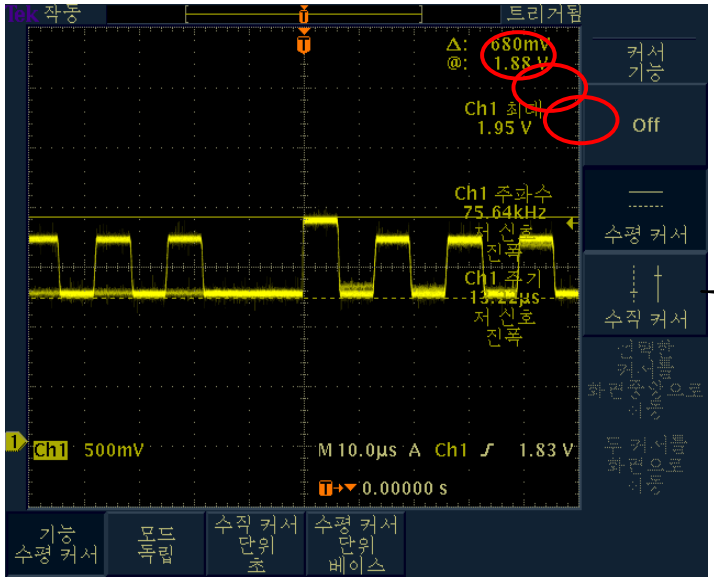

Blue signal input

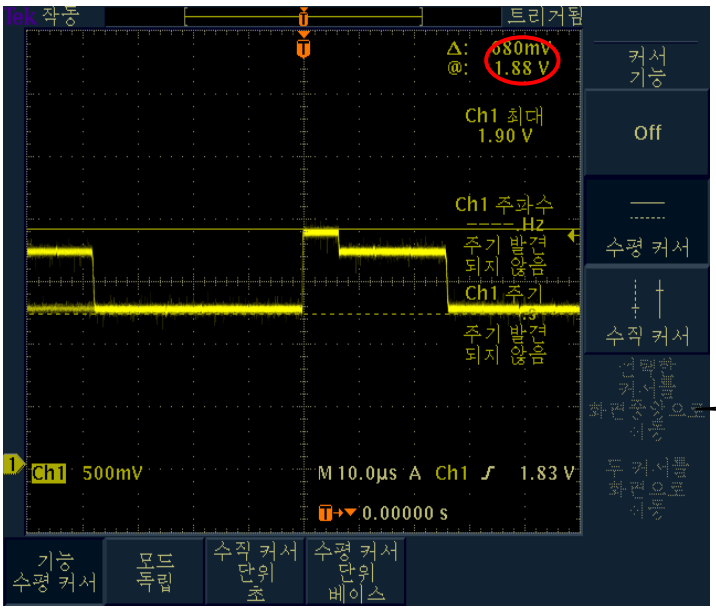

Green signal input

3) Weak TUNER signal
Check first that the voltage is impressed to LNB. If there is nothing wrong in LNB Voltage, check if the voltage is impressed well into TUNER bundle and if data flow out properly. If every condition is satisfied, TUNER itself can be considered to be defective. In occasion, precise inspection should be done in case that there is SHORT between pins(fault rarely made by a worker).

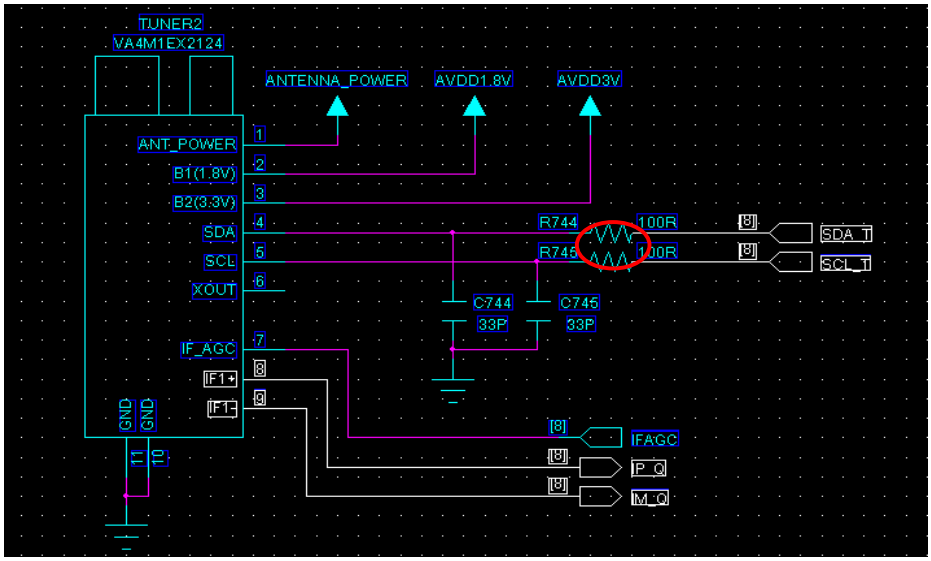

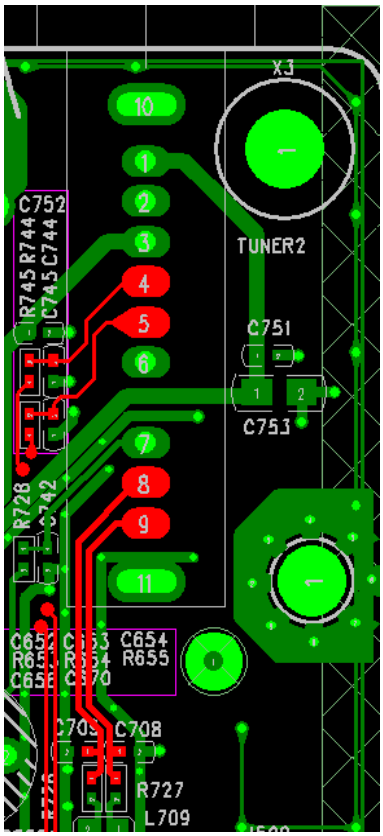

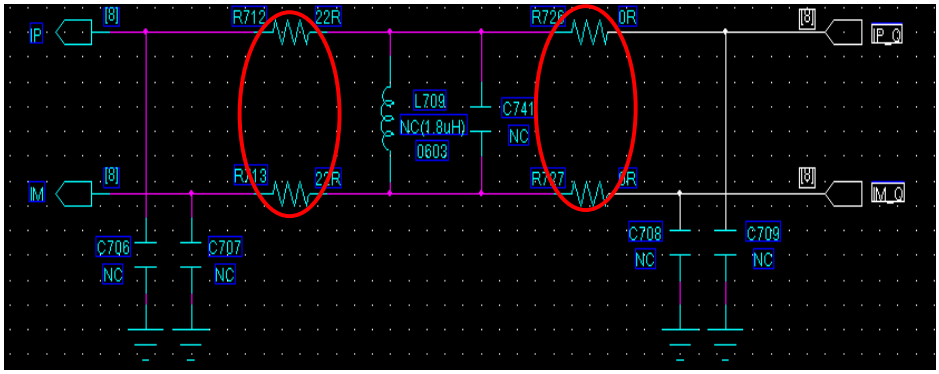

4) Screen ratio problem

If a strange ratio in 4:3 and 16:9 is detected, the voltage of TV scart pin number 8 is below 9V. In case of around 7V, screen will be shown with 16:9 ratio. In case of over 10V, the ratio will be 4:3. If there is still a fault on screen after adjusting screen ratio, it means the resistance of R595 on the circuit is not 1K. If the voltage is normal but the voltage switch does not operate properly, it means that Q593 TR is not operating normally. In addition, Q592 can affect the problem because Q592 is a TV/sat transferring switch .

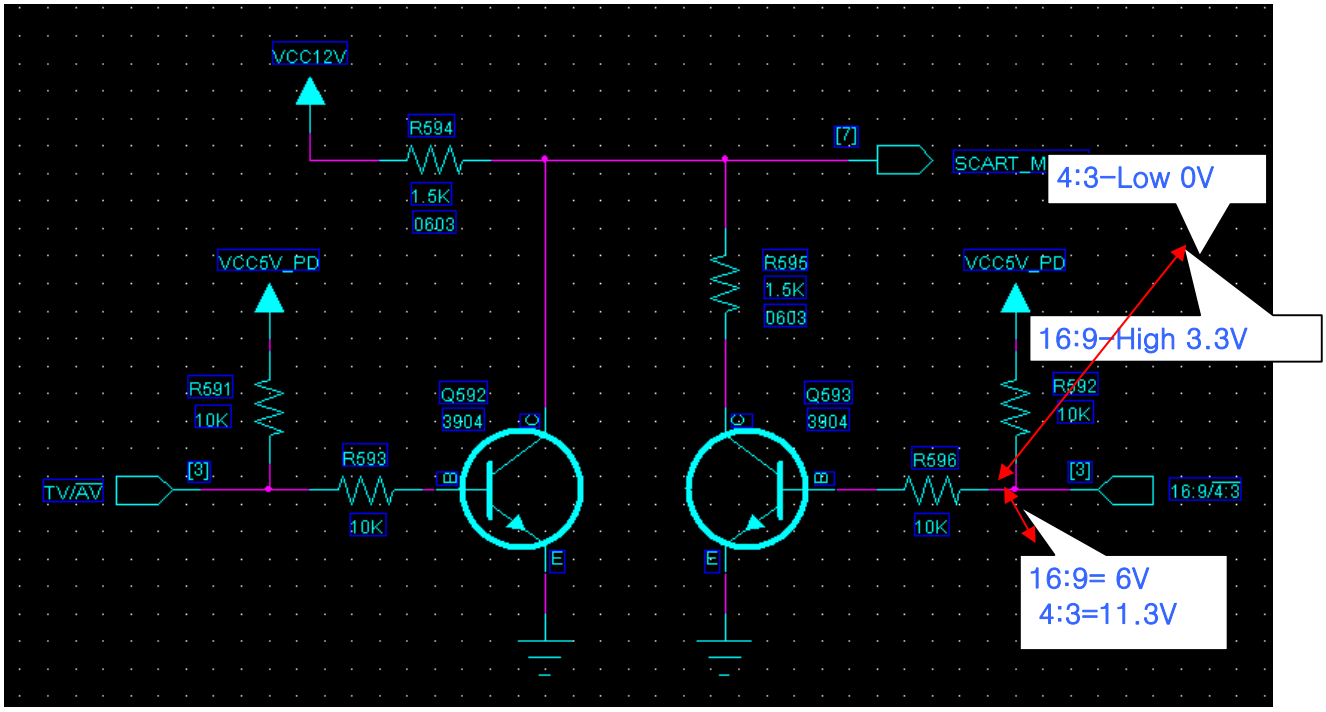

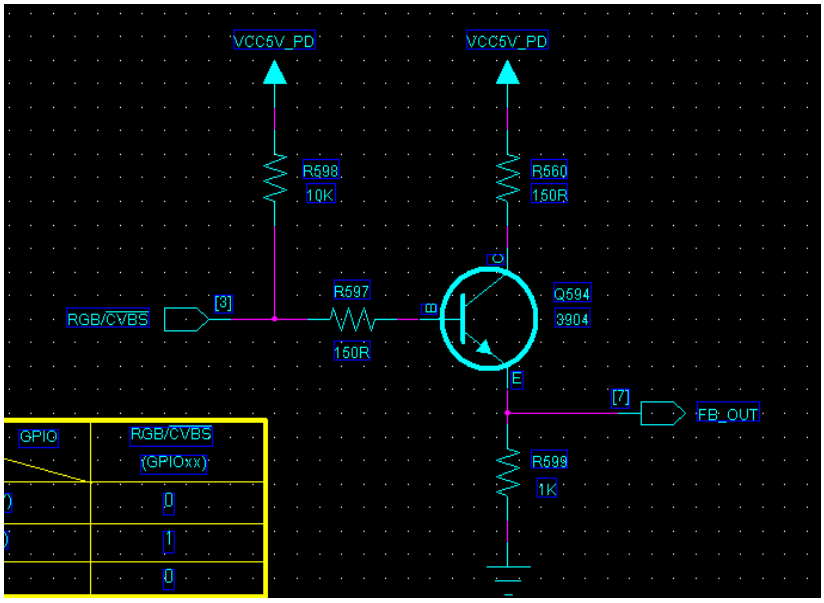

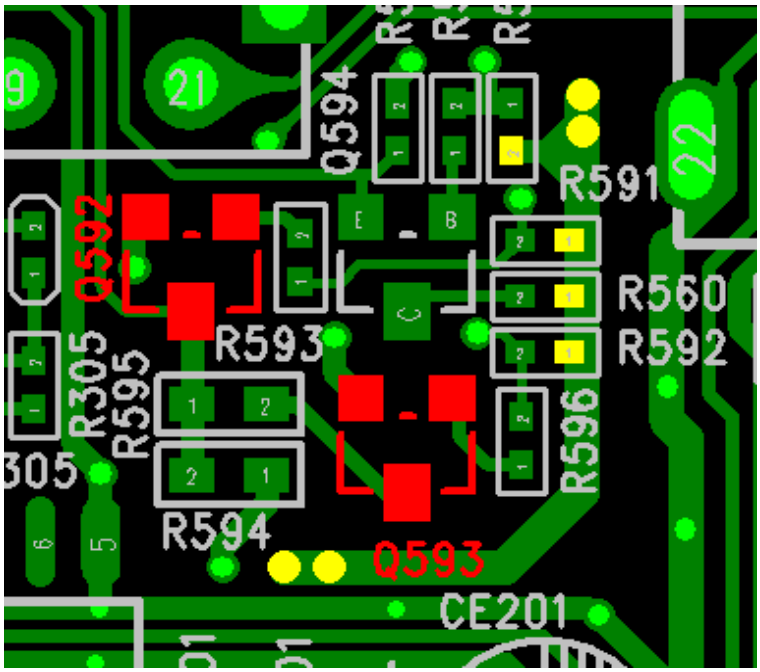
Q592
R305
R595
R594
R593
Q594
Q593
R591
R560
R592
R596
CE201
22
21
9

2 SCHEMATIC.COMPONENT LAYOUT AND BOM OF POWER SUPPLY

2.1 SCHEMATIC OF POWER SUPPLY

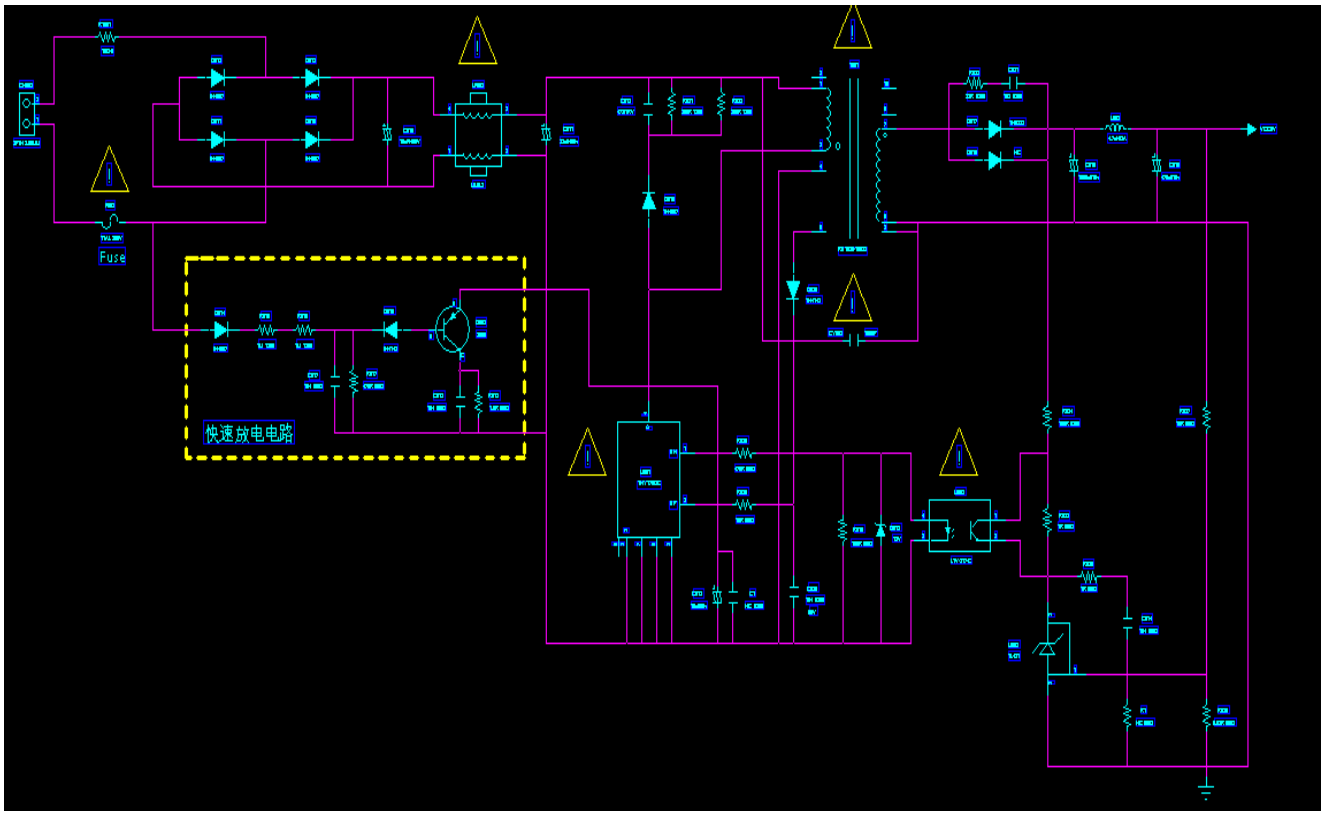

2.2 COMPONENT LAYOUT OF POWER SUPPLY

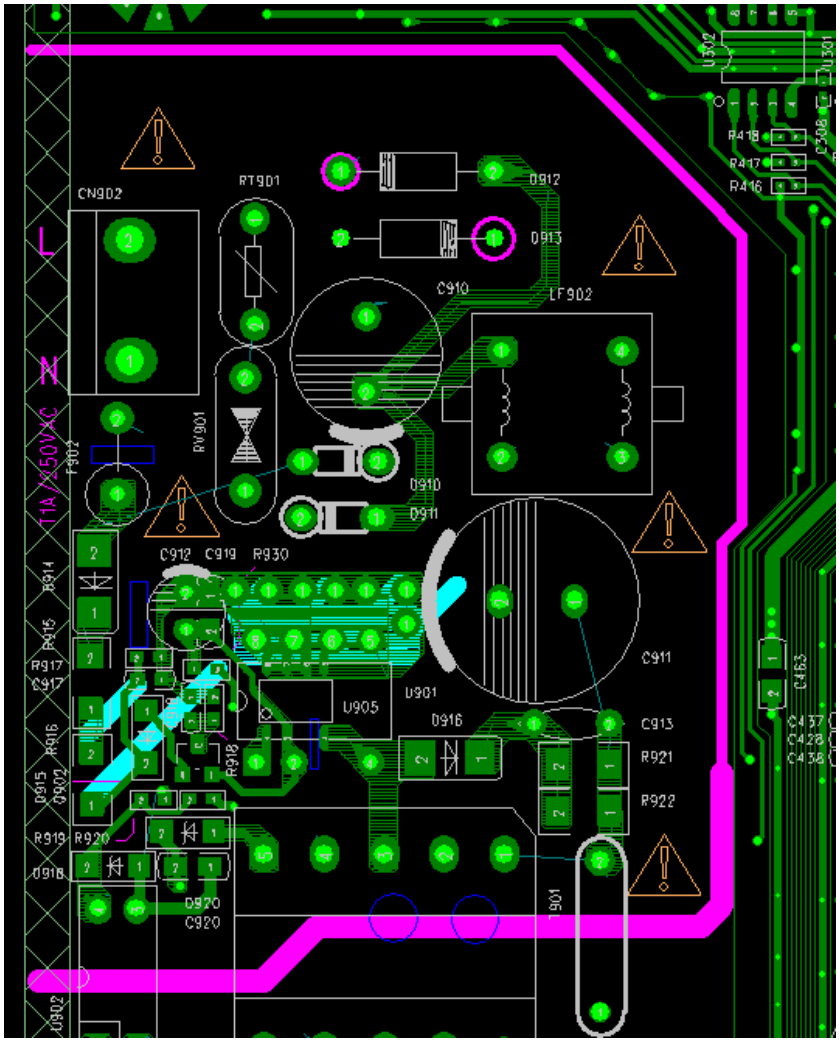

3 SCHEMATIC.COMPONENT LAYOUT AND BOM OF MAIN BOARD

3.1 SCHEMATIC OF MAIN BOARD

REV.	HISTORY OF MODIFICATIONS	CHECK.BY	APP.BY	DATE
1				
2				

BLOCK DIAGRAM

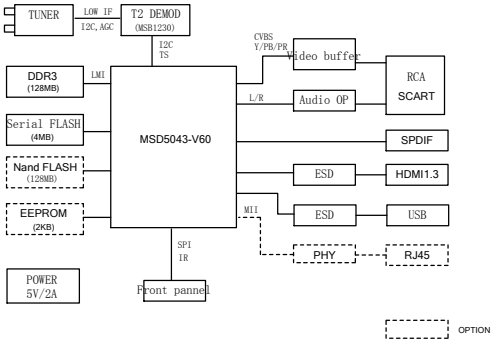

POWER BLOCK

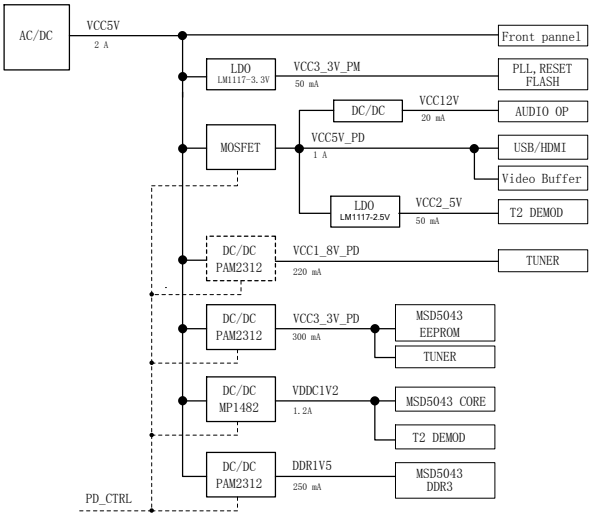

Version History

V1.0: 2011-07-24 Created

Shenzhen Jiuzhou Electric CO.,LD			
DESCRIPTION	PAGE DESCRIPTION		
DOC. NO.:		MODEL NO.:	
SCH P/N:		PROJECT CODE:	
PCB P/N:		DOC. REV.:	V1.1

DESIGNED BY:	Xuewei	2011-12-19	SIGN / DATE
DRAWN BY:			SIGN / DATE
CHECKED BY:			SIGN / DATE
APPROVED BY:			SIGN / DATE
SIZE: A2		SHEET: 1 OF 11	

REV.	HISTORY OF MODIFICATIONS	CHECK.BY	APP.BY	DATE
1				
2				

GPIO MAPPING:

MODE_0	USAGE	USAGE DETAIL	NOTE
PM_GPIO0	/FLASH_WP	SFLASH	
PM_GPIO1	RGB/$\overline{CVBS}$	SCART	
PM_GPIO2	16:9/$\overline{4:3}$	SCART	
PM_GPIO3	TV/$\overline{AV}$	SCART	
PD_CTRL	PD_CTRL	POWER CTRL	
PM_GPIO5	ANT_PWR_CTRL	TUNER	
PM_GPIO6	ANT_OVERLOAD	TUNER	
PM_GPIO8	MUTE_CTRL	AUDIO_MUTE	
S_GPIO1	USB_OCD	USB	
S_GPIO2	/USB_CTRL	USB	
S_GPIO4	FE_RST	DEMOD	
SAR1	FP_CLK	Front panel	
SAR2	FP_DATA	Front panel	
SAR3	FP_STB	Front panel	

Shenzhen Jiuzhou Electric CO.,LD			
DESCRIPTION	PAGE DESCRIPTION		
DOC. NO.:		MODEL NO.:	
SCH P/N:		PROJECT CODE:	
PCB P/N:		DOC. REV.:	V1.1

DESIGNED BY:	Xuewei	2011-12-19	SIGN / DATE
DRAWN BY:			SIGN / DATE
CHECKED BY:			SIGN / DATE
APPROVED BY:			SIGN / DATE
SIZE: A2		SHEET: 2 OF 11	

REV.	HISTORY OF MODIFICATIONS	CHECK.BY	APP.BY	DATE
1				
2				

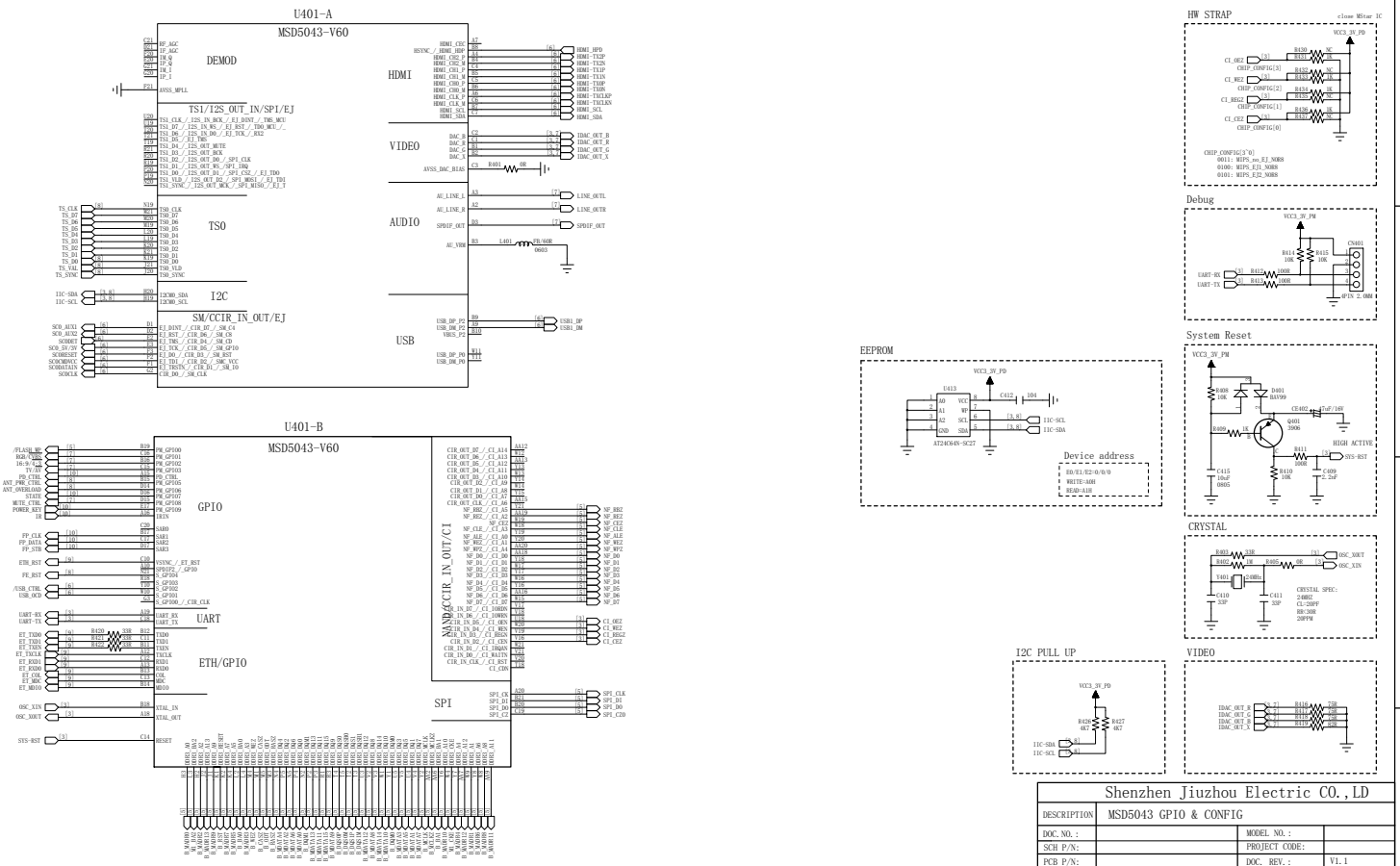

Shenzhen Jiuzhou Electric CO.,LD

DESCRIPTION	MSD5043 GPIO & CONFIG		
DOC. NO.:		MODEL NO.:	
SCH P/N:		PROJECT CODE:	
PCB P/N:		DOC. REV.:	V1.1
DESIGNED BY:	Xuewei	2011-12-19	SIGN / DATE
DRAWN BY:			SIGN / DATE
CHECKED BY:			SIGN / DATE
APPROVED BY:			SIGN / DATE
SIZE: A2		SHEET: 3 OF 11	

REV.	HISTORY OF MODIFICATIONS	CHECK.BY	APP.BY	DATE
1				
2				

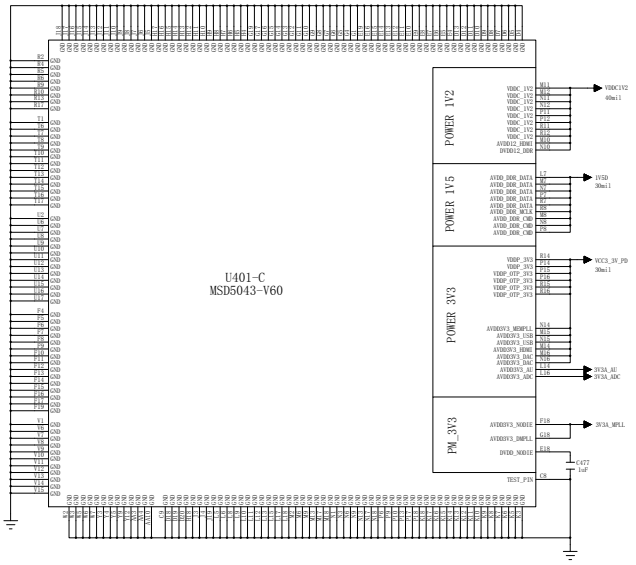

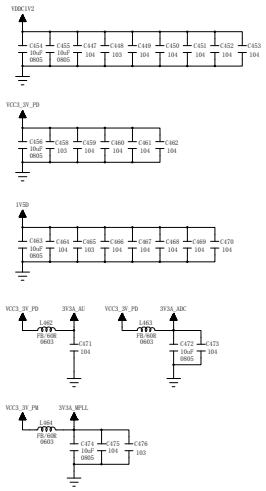

Shenzhen Jiuzhou Electric CO.,LD				
DESCRIPTION	MSD5043 POWER PIN			
DOC. NO.:		MODEL NO.:		
SCH P/N:		PROJECT CODE:		
PCB P/N:		DOC. REV.:	V1.1	
THIS DOCUMENT IS THE PROPERTY OF Shenzhen Jiuzhou Electric CO.,LD. THE CONTENTS OF THIS DOCUMENT ARECONFIDENTIAL AND CONSTITUTE TRADE SECERTSPROPRIETARY TO Shenzhen Jiuzhou Electric CO.,LD. NEITHER THIS DOCUMENT NOR ITS CONTENTS SHALL BE DISCLOSED TO ANY UNAUTHORIZED PERSON COPIED OR PUBLISHED WITHOUT Shenzhen Jiuzhou Electric CO.,LD.'S PRIOR WRITTEN CONSENT. COPYRIGHT © 2011 Shenzhen Jiuzhou Electric CO.,LD.	DESIGNED BY: Xuewei	2011-12-19	SIGN / DATE	
	DRAWN BY:		SIGN / DATE	
	CHECKED BY:		SIGN / DATE	
	APPROVED BY:		SIGN / DATE	
	SIZE: A2	SHEET: 4 OF 11		

REV.	HISTORY OF MODIFICATIONS	CHECK.BY	APP.BY	DATE
1				
2				

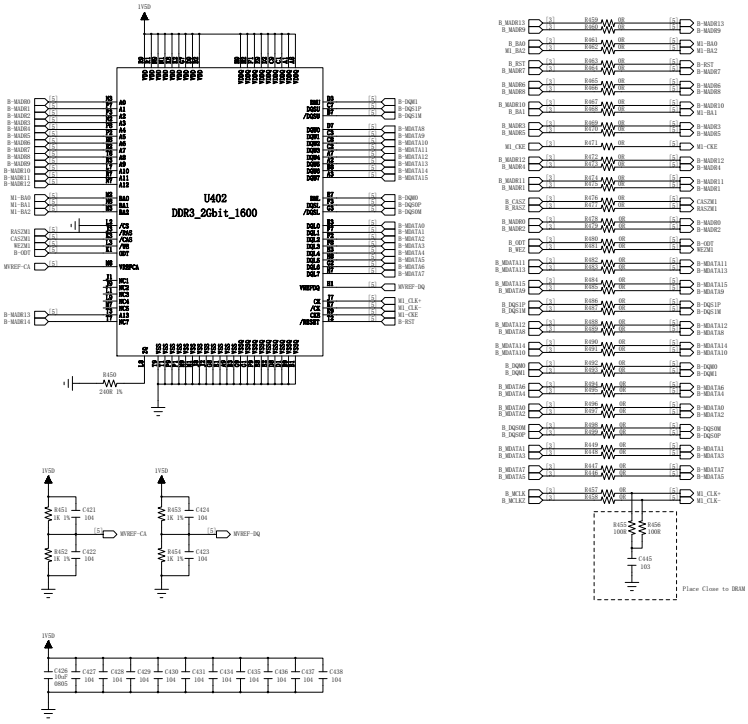

Serial NOR FLASH

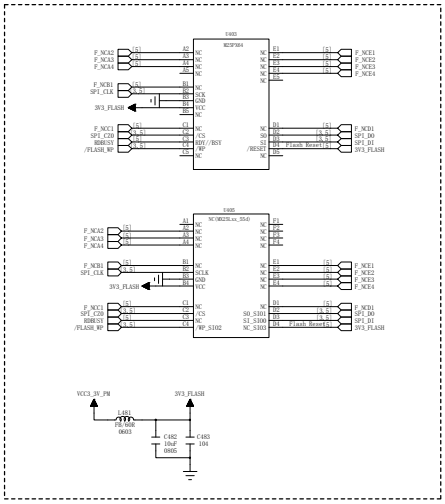

Nand flash

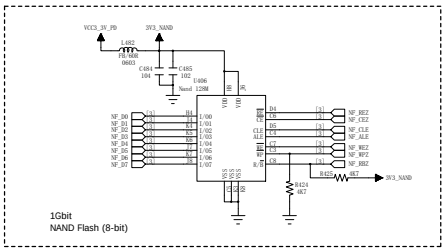

Shenzhen Jiuzhou Electric CO.,LD			
DESCRIPTION	DDR & FLASH		
DOC. NO.:		MODEL NO.:	
SCH P/N:		PROJECT CODE:	
PCB P/N:		DOC. REV.:	V1.1
DESIGNED BY:	Xuewei	2011-12-19	SIGN / DATE
DRAWN BY:			SIGN / DATE
CHECKED BY:			SIGN / DATE
APPROVED BY:			SIGN / DATE
SIZE: A2		SHEET: 5 OF 11	

REV.	HISTORY OF MODIFICATIONS	CHECK.BY	APP.BY	DATE
1				
2				

HDMI

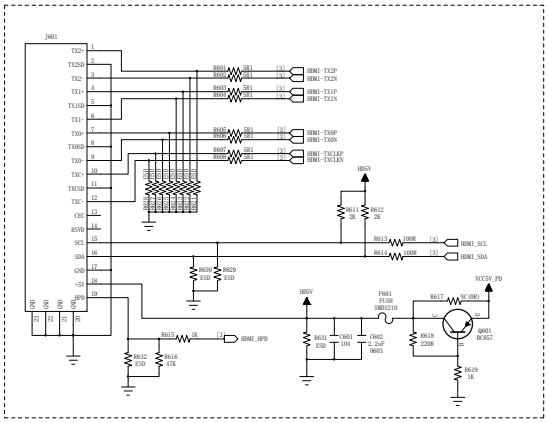

USB Power

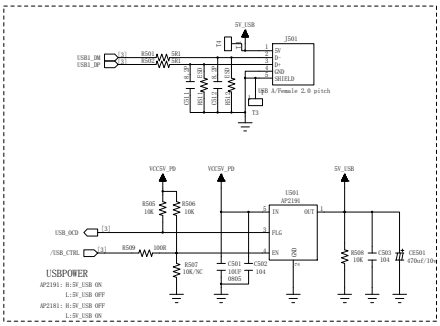

Smart Card

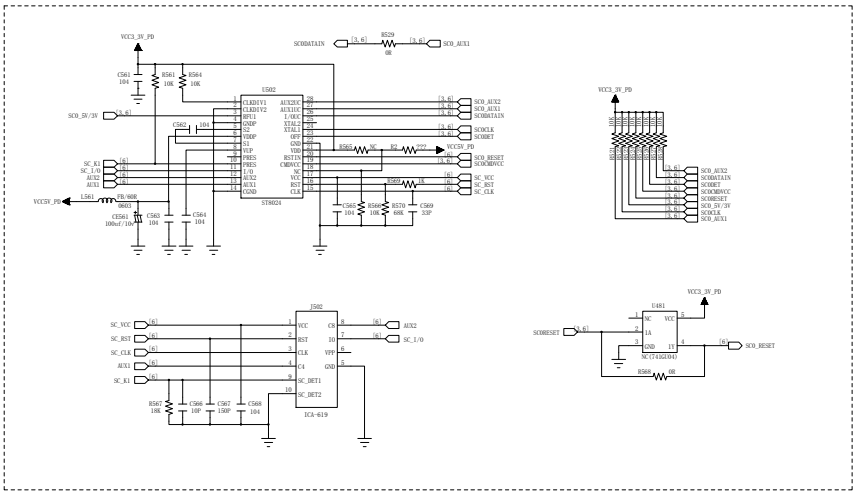

Screw Holes

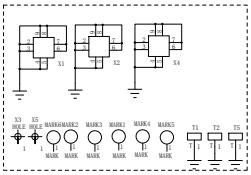

Shenzhen Jiuzhou Electric CO.,LD			
DESCRIPTION	HDMI & USB & Smart card		
DOC. NO.:		MODEL NO.:	
SCH P/N:		PROJECT CODE:	
PCB P/N:		DOC. REV.:	V1.1
THIS DOCUMENT IS THE PROPERTY OF Shenzhen Jiuzhou Electric CO.,LD. THE CONTENTS OF THIS DOCUMENT ARECONFIDENTIAL AND CONSTITUTE TRADE SECERTSPROPRIETARY TO Shenzhen Jiuzhou Electric CO.,LD. NEITHER THIS DOCUMENT NOR ITS CONTENTS SHALL BE DISCLOSED TO ANY UNAUTHORIZED PERSON COPIED OR PUBLISHED WITHOUT Shenzhen Jiuzhou Electric CO.,LD.'S PRIOR WRITTEN CONSENT. COPYRIGHT © 2011 Shenzhen Jiuzhou Electric CO.,LD.	DESIGNED BY: Xuewei	2011-12-19	SIGN / DATE
	DRAWN BY:		SIGN / DATE
	CHECKED BY:		SIGN / DATE
	APPROVED BY:		SIGN / DATE
	SIZE: A2	SHEET: 6 OF 11	

REV.	HISTORY OF MODIFICATIONS	CHECK.BY	APP.BY	DATE
1				
2				

AUDIO OP

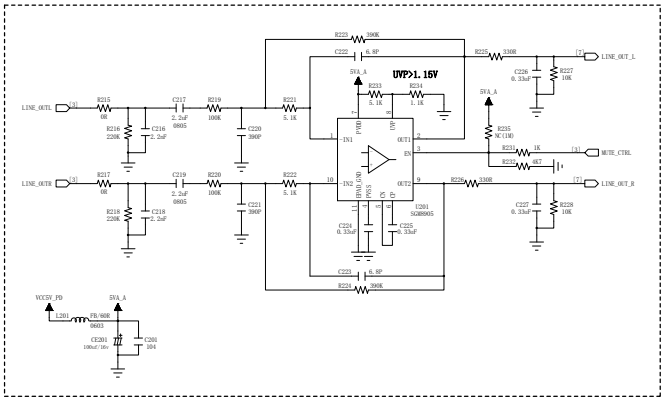

4:3/16:9 Control

MODE \ GP10	AV/$\overline{TV}$ (GP10xx)	16:9/$\overline{4:3}$ (GP10xx)
16:9	(5V~8V)	1	1
AV	(9.5V~12V)	1	0
TV	(0V)	0	X

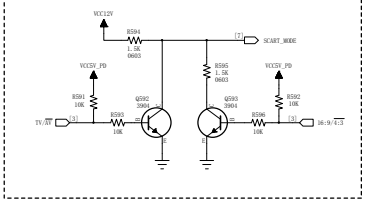

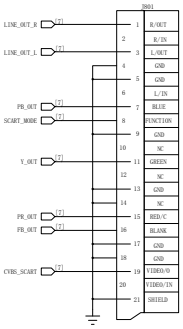

TV SCART

RGB/CVBS Control

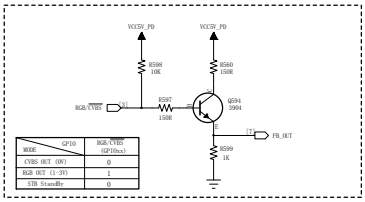

MODE \ GP10	RGB/CVBS (GP10xx)
CVBS OUT (0V)	0
RGB OUT (1-3V)	1
STB StandBy	0

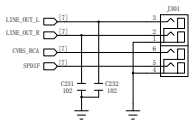

Video Buffer

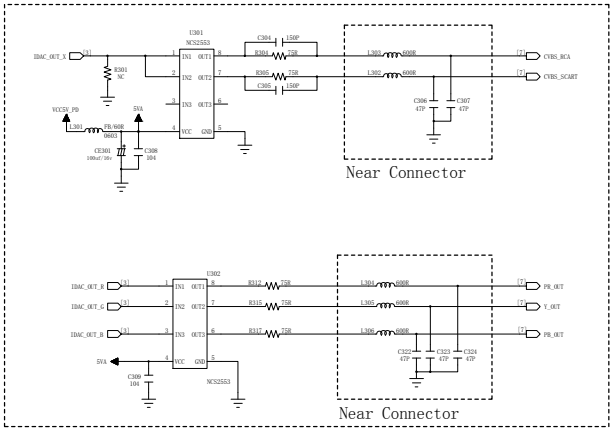

SPDIF OUT

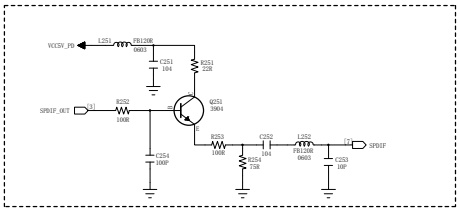

Shenzhen Jiuzhou Electric CO.,LD			
DESCRIPTION	AUDIO & VIDEO & SCART		
DOC. NO.:		MODEL NO.:	
SCH P/N:		PROJECT CODE:	
PCB P/N:		DOC. REV.:	V1.1
DESIGNED BY:	Xuewei	2011-12-19	SIGN / DATE
DRAWN BY:			SIGN / DATE
CHECKED BY:			SIGN / DATE
APPROVED BY:			SIGN / DATE
SIZE: A2		SHEET: 7 OF 11	

REV.	HISTORY OF MODIFICATIONS	CHECK.BY	APP.BY	DATE
1				
2				

Half NIM Tuner

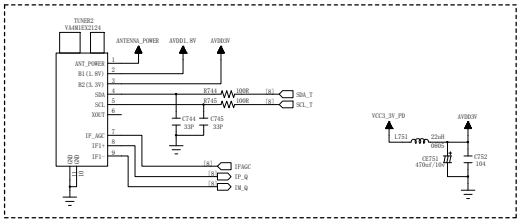

ANTENNA_POWER

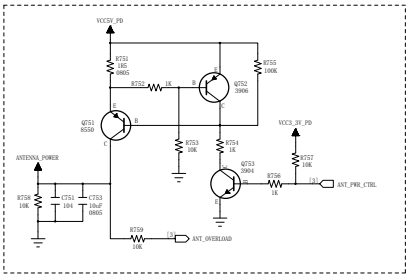

H/W Strap

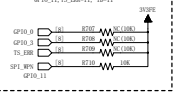

CRYSTAL

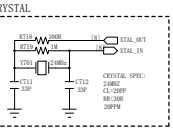

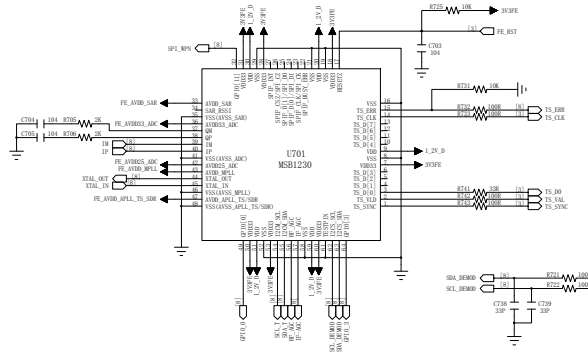

I2C

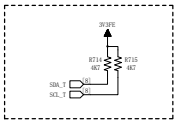

BPF Reserved

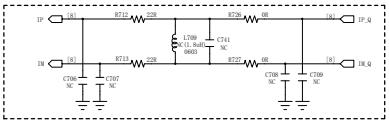

2.5V for DEMOD

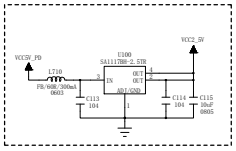

AGC

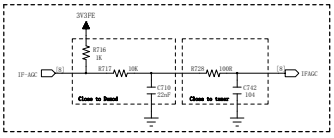

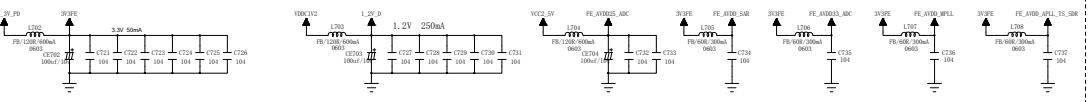

Shenzhen Jiuzhou Electric CO.,LD			
DESCRIPTION	TUNER & DEMOD		
DOC. NO.:		MODEL NO.:	
SCH P/N:		PROJECT CODE:	
PCB P/N:		DOC. REV.:	V1.1
DESIGNED BY:	Xuewei	2011-12-19	SIGN / DATE
DRAWN BY:			SIGN / DATE
CHECKED BY:			SIGN / DATE
APPROVED BY:			SIGN / DATE
SIZE: A2		SHEET: 8 OF 11	

REV.	HISTORY OF MODIFICATIONS	CHECK.BY	APP.BY	DATE
1				
2				

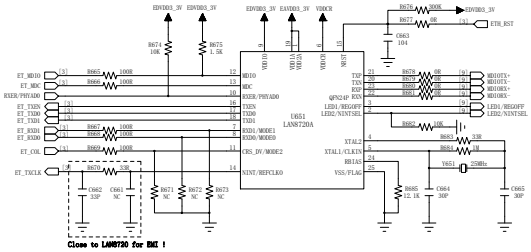

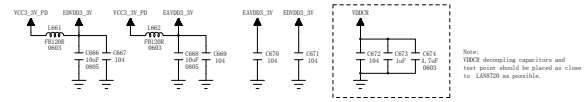

Note:
VDDCR decoupling capacitors and test point should be placed as close to LAN8720 as possible.

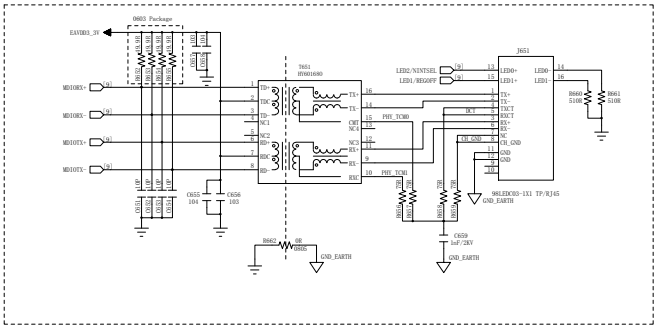

Shenzhen Jiuzhou Electric CO.,LD			
DESCRIPTION	PAGE DESCRIPTION		
DOC. NO.:		MODEL NO.:	
SCH P/N:		PROJECT CODE:	
PCB P/N:		DOC. REV.:	V1.1

DESIGNED BY:	Xuewei	2011-12-19	SIGN / DATE
DRAWN BY:			SIGN / DATE
CHECKED BY:			SIGN / DATE
APPROVED BY:			SIGN / DATE
SIZE: A2		SHEET: 9 OF 11	

REV.	HISTORY OF MODIFICATIONS	CHECK.BY	APP.BY	DATE
1				
2				

DC/DC 3.3V

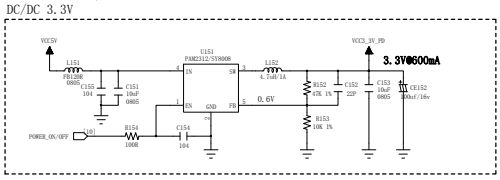

DC/DC 1.2V (Core Power)

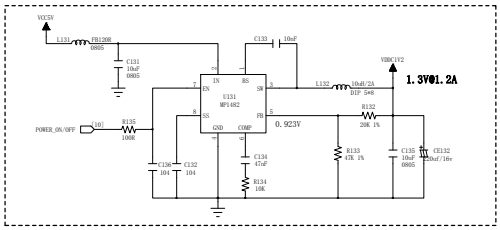

DC/DC 1.8V (DDRII POWER)

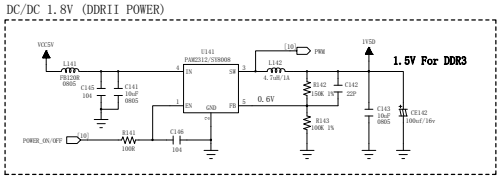

3.3V for Standby

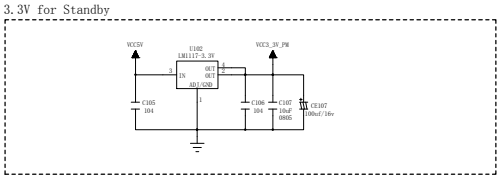

12V

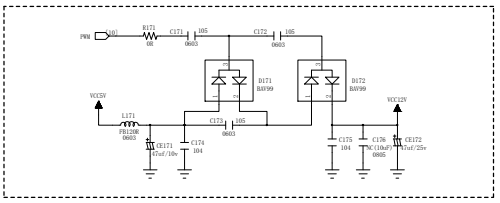

5V Switch

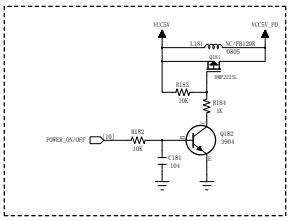

Power control

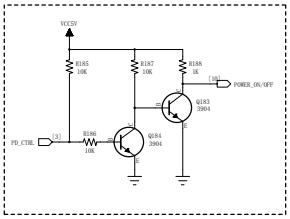

LED & DRIVER IC

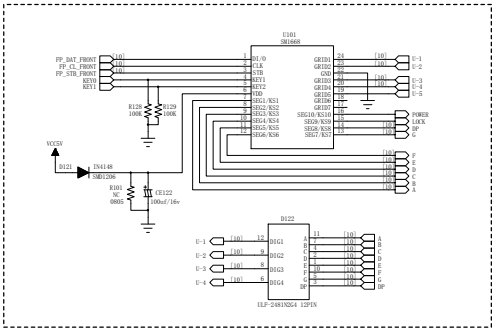

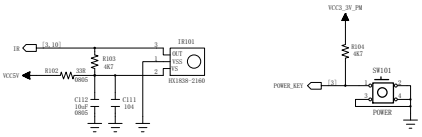

Front Panel Connector

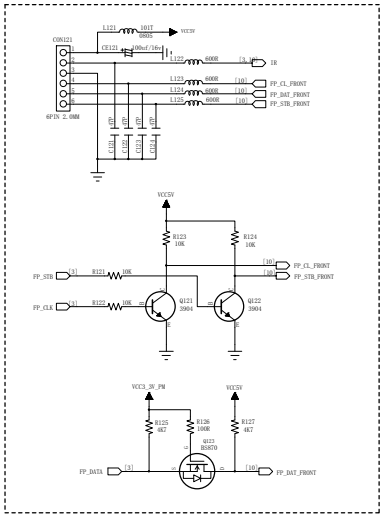

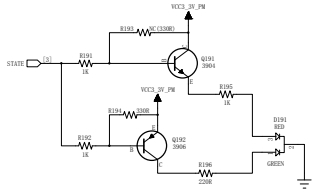

Shenzhen Jiuzhou Electric CO.,LD			
DESCRIPTION	DC/DC & FRONT PANNEL		
DOC. NO.:		MODEL NO.:	
SCH P/N:		PROJECT CODE:	
PCB P/N:		DOC. REV.:	V1.1
THIS DOCUMENT IS THE PROPERTY OF Shenzhen Jiuzhou Electric CO.,LD. THE CONTENTS OF THIS DOCUMENT ARECONFIDENTIAL AND CONSTITUTE TRADE SECERTSPROPRIETARY TO Shenzhen Jiuzhou Electric CO.,LD. NEITHER THIS DOCUMENT NOR ITS CONTENTS SHALL BE DISCLOSED TO ANY UNAUTHORIZED PERSON, COPIED OR PUBLISHED WITHOUT Shenzhen Jiuzhou Electric CO.,LD.'S PRIOR WRITTEN CONSENT. COPYRIGHT © 2011 Shenzhen Jiuzhou Electric CO.,LD.	DESIGNED BY: Xuewei	2011-12-19	SIGN / DATE
	DRAWN BY:		SIGN / DATE
	CHECKED BY:		SIGN / DATE
	APPROVED BY:		SIGN / DATE
	SIZE: A2	SHEET: 10 OF 11	

REV.	HISTORY OF MODIFICATIONS	CHECK.BY	APP.BY	DATE
1				
2				

AC-DC

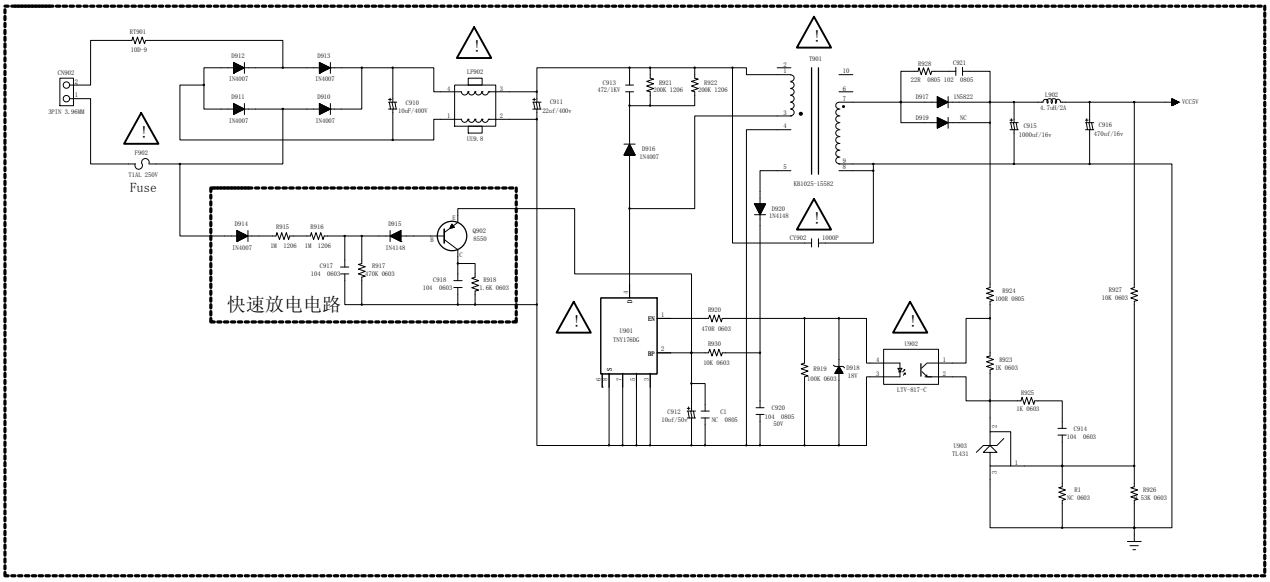

Shenzhen Jiuzhou Electric CO.,LD				
DESCRIPTION	AC-DC			
DOC. NO.:		MODEL NO.:		
SCH P/N:		PROJECT CODE:		
PCB P/N:		DOC. REV.:	V1.1	
THIS DOCUMENT IS THE PROPERTY OF Shenzhen Jiuzhou Electric CO.,LD. THE CONTENTS OF THIS DOCUMENT ARECONFIDENTIAL AND CONSTITUTE TRADE SECERTSPROPRIETARY TO Shenzhen Jiuzhou Electric CO.,LD. NEITHER THIS DOCUMENT NOR ITS CONTENTS SHALL BE DISCLOSED TO ANY UNAUTHORIZED PERSON COPIED OR PUBLISHED WITHOUT Shenzhen Jiuzhou Electric CO.,LD.'S PRIOR WRITTEN CONSENT. COPYRIGHT © 2011 Shenzhen Jiuzhou Electric CO.,LD.	DESIGNED BY:	Xuewei	2011-12-19	SIGN / DATE
	DRAWN BY:			SIGN / DATE
	CHECKED BY:			SIGN / DATE
	APPROVED BY:			SIGN / DATE
	SIZE: A2		SHEET: 11 OF 11	

DTT1609V11101112MB
COMPONENT SIDE
FINISHING: OSP
MATERIAL: FR4 TH'K 1.6MM

SHEET: 1 OF 7
REV: 1.1
DIGITAL TELEMEDIA CO.,LTD
DESIGNED BY: Yang zuoxiang

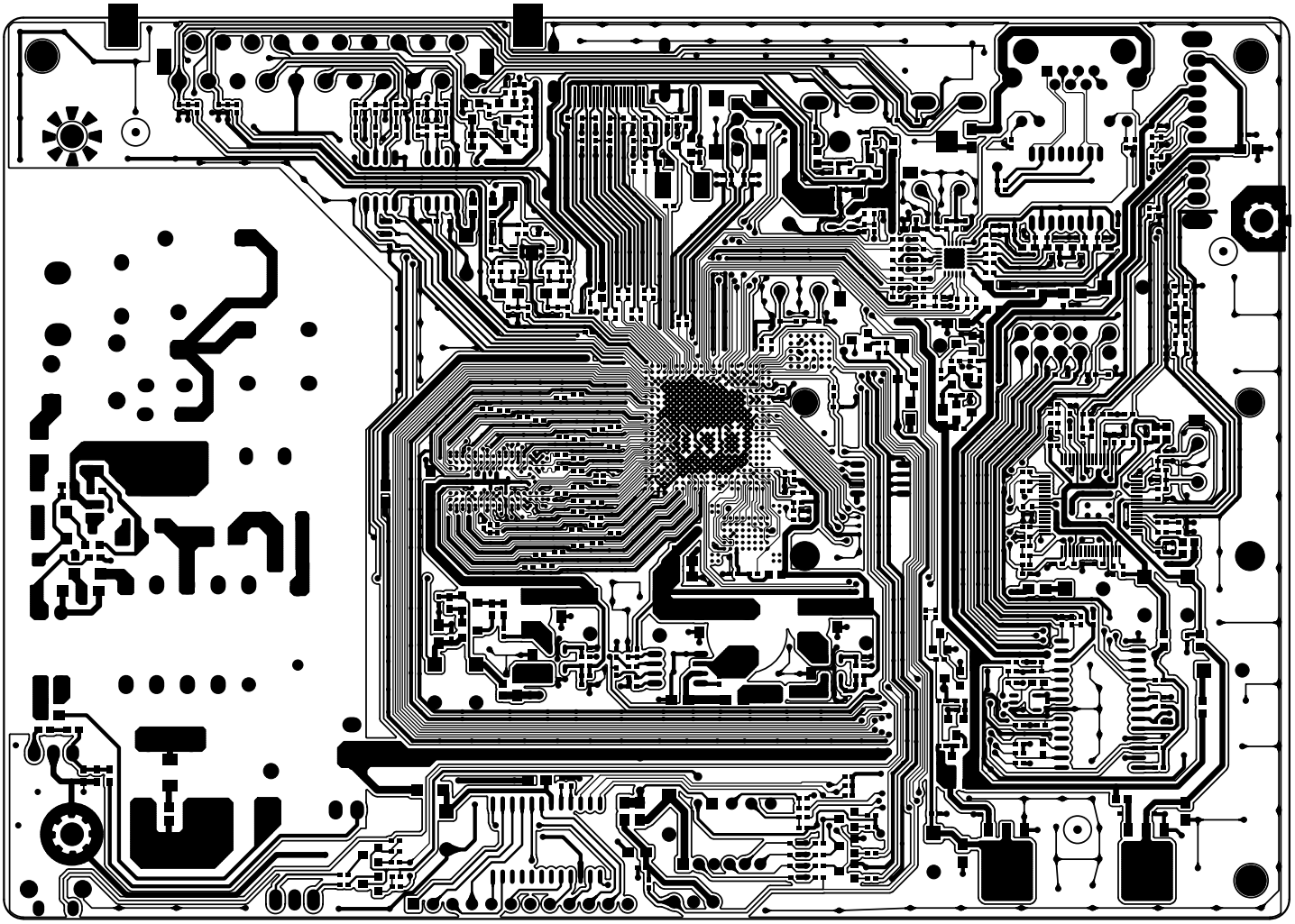

DTT1609V111101112MB

SOLDER SIDE

SHEET: 2 OF 7

REV: 1.1

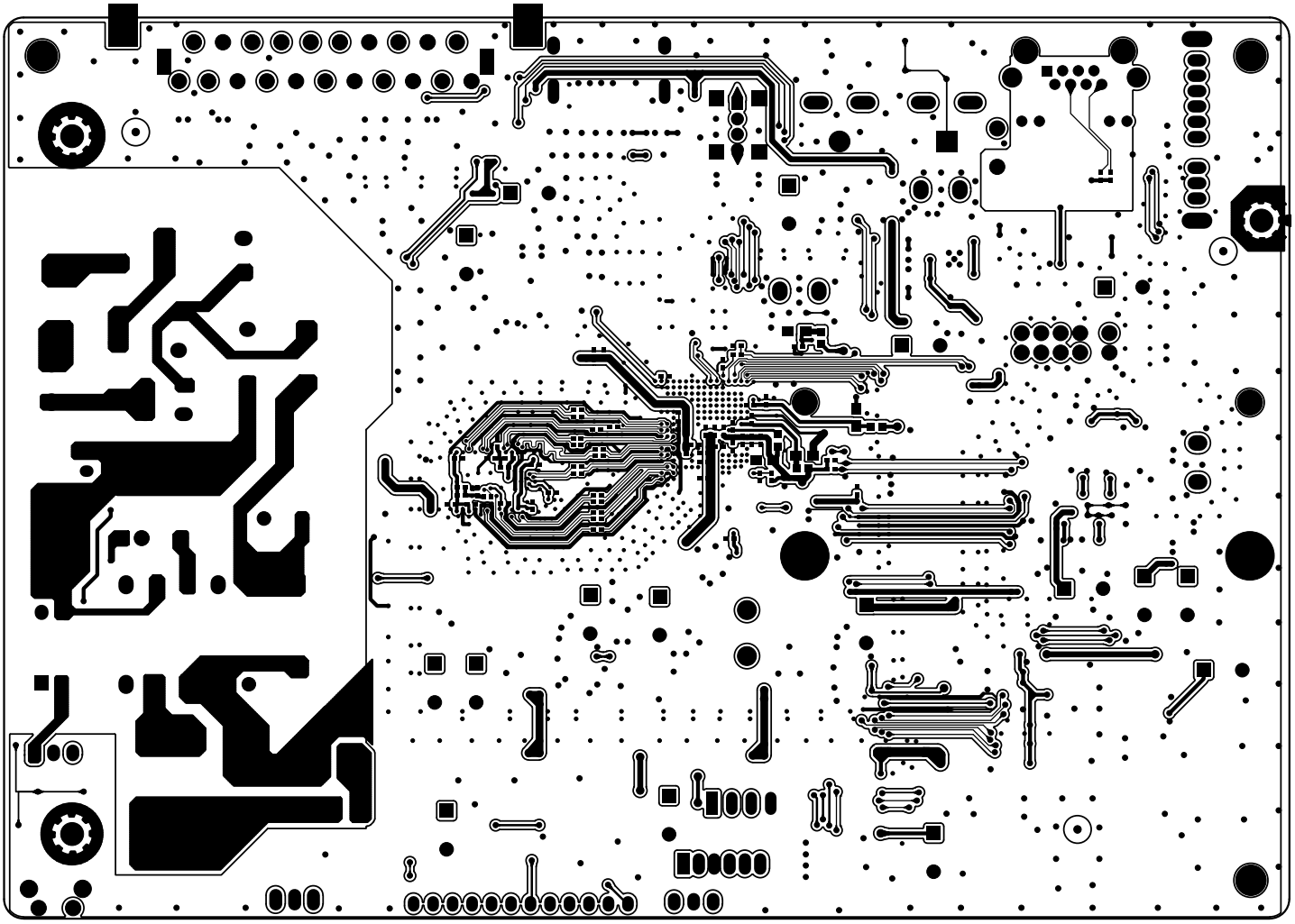

DTT1609V11101112MB SHEET: 6 OF 7

COMPONENT SIDE SILKSCREEN REV: 1.1

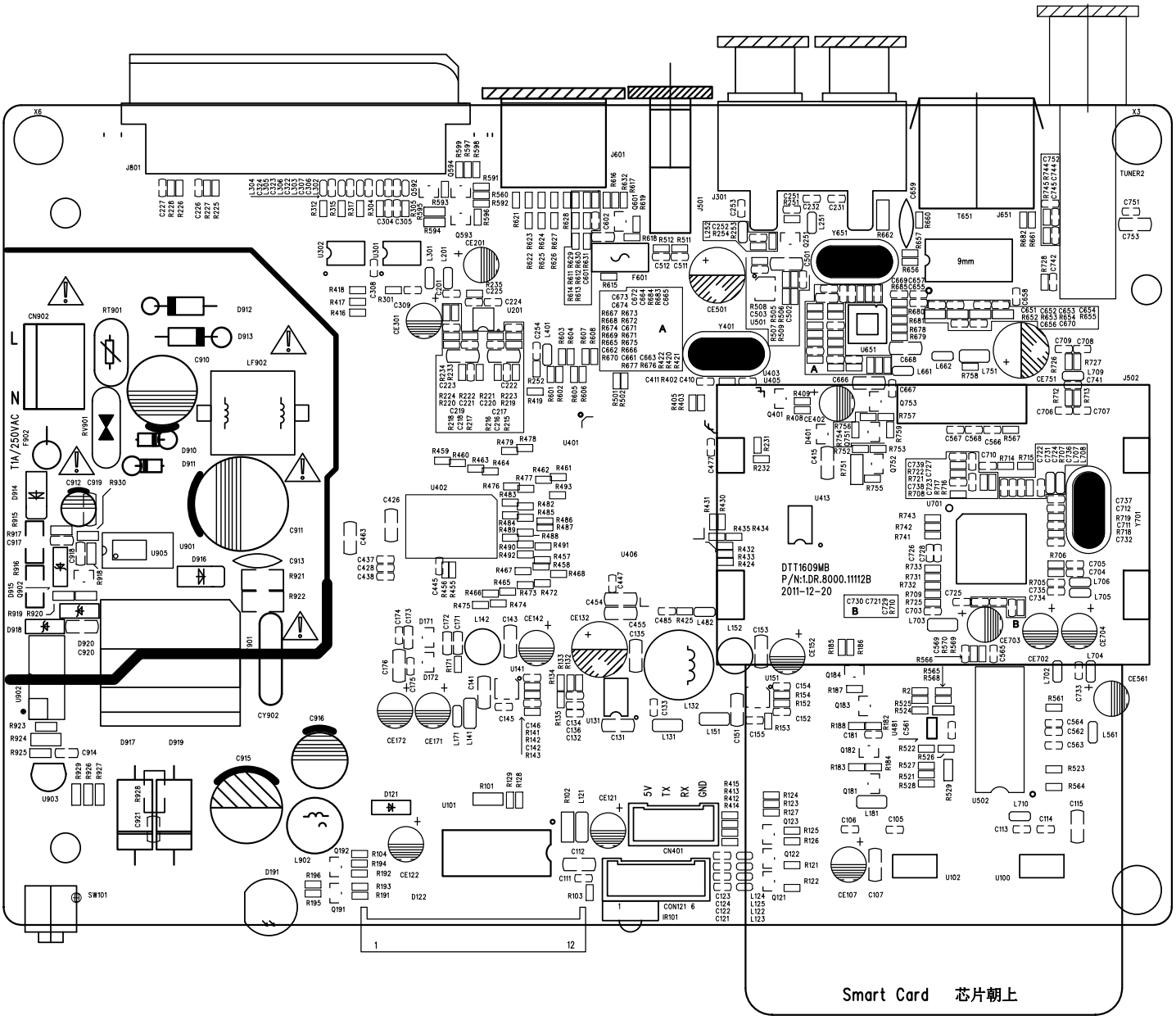

DTT1609V11101112MB

SOLDER SIDE SILKSCREEN

SHEET: 7 OF 7

REV: 1.1

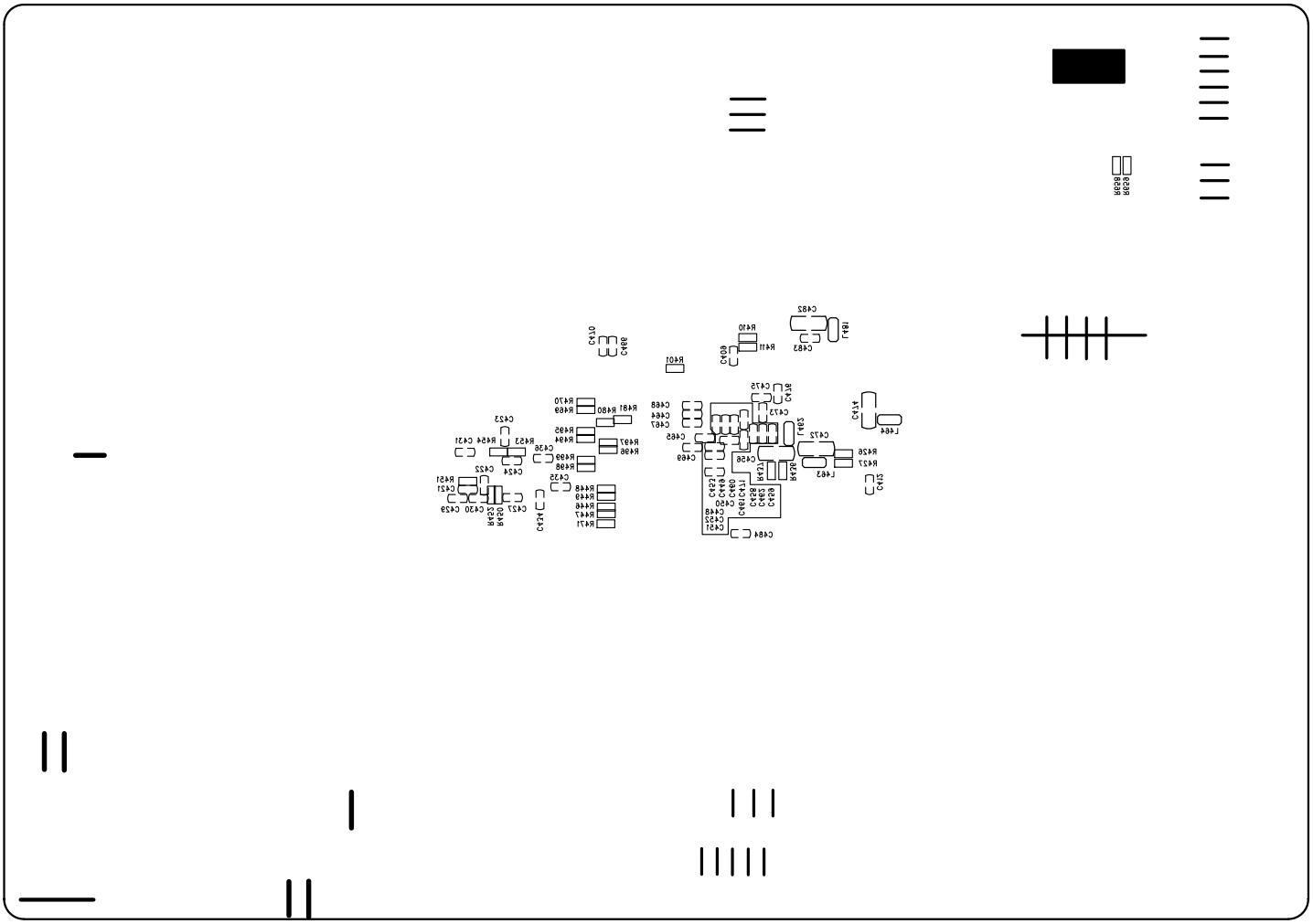

深圳九洲公司
ShenzhenJiuzhouCo.,LtDR.

BOMNo.		DTT1609	
Version		1.0	
Released		制作人名	
SMD			
SMD			
Item	**Q'ty**	**Location**	**Remark**
1	5	L302 L303 L304 L305 L306	贴片磁珠GZ1005D601TF，600 ohm,200MA，1005
2	18	L171 L201 L251 L252 L301 L401 L462 L463 L464 L481 L561 L702 L704 L705 L706 L707 L708 L710	BG1608B101BF 100 ohm 100M 0603
3	5	L131 L141 L151 L703 L751	CBG201209U101T/BG2012B101TF, 100 ohm 300MA
4	2	L142 L152	4.7uH，±20%，1.7A，45*32mm / SM4532-4R7M
5	2	C511 C512	C-CERAMIC, CHIP ;8.2pF， +/-0.25PF, 50V, NPO, TP,1005
6	2	C253 C566	C-CERAMIC, CHIP ; 10pF, 5%, 50V, NPO, TP, 1005
7	2	C142 C152	C-CERAMIC, CHIP ; 22pF, 5%, 50V, NPO, TP, 1005
8	9	C410 C411 C569 C711 C712 C738 C739 C744 C745	C-CERAMIC, CHIP ; 33pF, 5%, 50V, NPO, TP, 1005
9	5	C306 C307 C322 C323 C324	C-CERAMIC, CHIP ; 47pF, 5%, 16V, NPO, TP, 1005
10	3	C222 C223 C254	C-CERAMIC, CHIP ; 100pF, 5%, 50V, NPO, TP, 1005
11	3	C304 C305 C567	C-CERAMIC, CHIP ; 150pF, 10%, 50V, X7R, TP, 1005
12	2	C220 C221	C-CERAMIC, CHIP ; 390pF, 10%, 50V, X7R, TP, 1005
13	4	C226 C227 C231 C232	C-CERAMIC, CHIP ; 1nF, 10%, 25V, X7R, TP, 1005,
14	3	C216 C218 C409	C-CERAMIC, CHIP ; 2.2nF, 10%, 50V, X7R, TP, 1005,
15	6	C133 C445 C448 C458 C465 C476	C-CERAMIC, CHIP ; 10nF, 10%, 50V, X7R, TP, 1005
16	1	C710	C-CERAMIC, CHIP ; 22nF, 10%, 25V, X7R, TP, 1005
17	1	C134	C-CERAMIC, CHIP ; 47nF, 10%, 16V, X7R, TP, 1005
18	86	C105 C106 C111 C113 C114 C132 C136 C145 C146 C154 C155 C174 C175 C181 C201 C251 C252 C308 C309 C412 C421 C422 C423 C424 C427 C428 C429 C430 C431 C434 C435 C436 C437 C438 C447 C449 C450 C451 C452 C453 C459 C460 C461 C462 C464 C466 C467 C468 C469 C470 C471 C473 C475 C483 C502 C503 C561 C562 C563 C564 C565 C568 C601 C703 C704 C705 C721 C722 C723 C724 C725 C726 C727 C728 C729 C730 C731 C732 C733 C734 C735 C736 C737 C742 C751 C752	C-CERAMIC, CHIP ; 100nF, +80-20%, 16V, Y5V, TP,1005
19	2	C224 C225	C-CERAMIC, CHIP ; 330nF, +80-20%, 10V, Y5V, TP,1005
20	1	C477	C-CERAMIC, CHIP ; 1uF, 10%, 6.3V, X5R, TP,1005
21	3	C914 C917 C918	C-CERAMIC, CHIP ; 100nF, 10%, 50V, X7R, TP,1608
22	3	C171 C172 C173	C-CERAMIC, CHIP ; 1uF, 10%, 16V, X7R, TP,1608
23	1	C602	C-CERAMIC, CHIP ; 2.2uF, +80-20%, 10V, Y5V, TP,1608
24	1	C921	C-CERAMIC, CHIP ; 1000pF, 10%, 50V, X7R, TP, 2012,
25	1	C920	C-CERAMIC, CHIP ; 100nF, +80-20%, 50V, Y5V, TP, 2012

26	2	C217 C219	C-CERAMIC, CHIP ; 2.2uF, +80-20%, 16V, Y5V, TP,2012
27	3	C135 C143 C153	C-CERAMIC, CHIP ;10UF, 10%, 6.3V, X5R, TP,2012,
28	17	C107 C112 C115 C131 C141 C151 C415 C426 C454 C455 C456 C463 C472 C474 C482 C501 C753	C-CERAMIC, CHIP ; 10uF, +80-20%, 10V, Y5V, TP,2012
29	54	R171 R215 R217 R401 R405 R446 R447 R448 R449 R457 R458 R459 R460 R461 R462 R463 R464 R465 R466 R467 R468 R469 R470 R471 R472 R473 R474 R475 R476 R477 R478 R479 R480 R481 R482 R483 R484 R485 R486 R487 R488 R489 R490 R491 R492 R493 R494 R495 R496 R497 R498 R499 R726 R727	R-CHIP ; 0 ohm, 5%, 1/16W, DA, TP, 1005
30	10	R501 R502 R601 R602 R603 R604 R605 R606 R607 R608	R-CHIP ; 5.1 ohm, 5%, 1/16W, DA, TP, 1005
31	3	R251 R712 R713	R-CHIP ; 22 ohm, 5%, 1/16W, DA, TP, 1005
32	5	R403 R420 R421 R422 R741	R-CHIP ; 33 ohm, 5%, 1/16W, DA, TP, 1005
33	24	R126 R135 R141 R154 R252 R253 R411 R412 R413 R455 R456 R509 R613 R614 R718 R721 R722 R728 R732 R733 R742 R743 R744 R745	R-CHIP ; 100 ohm, 5%, 1/16W, DA, TP, 1005
34	2	R560 R597	R-CHIP ; 150 ohm, 5%, 1/16W, DA, TP, 1005
35	2	R195 R618	R-CHIP ; 220 ohm, 5%, 1/16W, DA, TP, 1005
36	3	R194 R225 R226	R-CHIP ; 330 ohm, 5%, 1/16W, DA, TP, 1005
37	19	R184 R188 R191 R192 R196 R231 R409 R431 R433 R434 R436 R569 R599 R615 R619 R716 R752 R754 R756	R-CHIP ; 1K ohm, 5%, 1/16W, DA, TP, 1005
38	4	R611 R612 R705 R706	R-CHIP ; 2K ohm, 5%, 1/16W, DA, TP, 1005
39	9	R103 R104 R125 R127 R232 R426 R427 R714 R715	R-CHIP ; 4.7K ohm, 5%, 1/16W, DA, TP, 1005
40	2	R221 R222	R-CHIP ; 5.1K ohm, 5%, 1/16W, DA, TP, 1005
40	43	R121 R122 R123 R124 R134 R182 R183 R185 R186 R187 R227 R228 R408 R410 R414 R415 R505 R506 R508 R521 R522 R523 R524 R525 R526 R527 R528 R561 R564 R566 R591 R592 R593 R596 R598 R710 R717 R725 R731 R753 R757 R758 R759	R-CHIP ; 10K ohm, 5%, 1/16W, DA, TP, 1005
42	2	R219 R220	R-CHIP ; 12K ohm, 5%, 1/16W, DA, TP, 1005
43	1	R567	R-CHIP ; 18K ohm, 5%, 1/16W, DA, TP, 1005
44	2	R223 R224	R-CHIP ; 36K ohm, 5%, 1/16W, DA, TP, 1005
45	1	R570	R-CHIP ; 68K ohm, 5%, 1/16W, DA, TP, 1005
46	2	R216 R218	R-CHIP , 220Kohm, 5%, 1/16W, DA, TP, 1005
47	2	R402 R719	R-CHIP ; 1M ohm, 5%, 1/16W, DA, TP, 1005
48	10	R254 R304 R305 R312 R315 R317 R416 R417 R418 R419	R-CHIP ; 75 ohm, 1%, 1/16W, DA, TP, 1005
49	1	R450	R-CHIP ; 240 ohm, 1%, 1/16W, DA, TP, 1005
50	4	R451 R452 R453 R454	R-CHIP ; 1K ohm, 1%, 1/16W, DA, TP, 1005
51	1	R234	R-CHIP ; 1.1K ohm, 1%, 1/16W, DA, TP, 1005
52	1	R233	R-CHIP ; 3K ohm, 1%, 1/16W, DA, TP, 1005
53	1	R571	R-CHIP; 24k ohm 1%, 1/16W, DA, TP, 1005
54	1	R153	R-CHIP ; 10K ohm, 1%, 1/16W, DA, TP, 1005
55	1	R132	R-CHIP ; 20K ohm, 1%, 1/16W, DA, TP, 1005
56	3	R133 R152 R616	R-CHIP ; 47K ohm, 1%, 1/16W, DA, TP, 1005
57	4	R128 R129 R143 R755	R-CHIP ; 100K ohm, 1%, 1/16W, DA, TP, 1005

58	1	R142	R-CHIP ; 150K ohm, 1%, 1/16W, DA, TP, 1005
59	2	R529 R568	R-CHIP; 0 Ohm 5%, 1/10W, DA, TP, 1608
60	1	R920	R-CHIP; 470 Ohm 5%, 1/10W, DA, TP, 1608
61	2	R923 R925	R-CHIP , 1Kohm, 5%, 1/10W, DA, TP, 1608
62	3	R594 R595 R918	R-CHIP; 1.6K ohm 5%, 1/10W, DA, TP, 1608
63	2	R927 R930	R-CHIP; 10Kohm 5%, 1/10W, DA, TP, 1608
64	1	R919	R-CHIP , 100Kohm, 5%, 1/10W, DA, TP, 1608
65	1	R917	R-CHIP; 470K ohm 5%, 1/10W, DA, TP, 1608
66	1	R926	R-CHIP ; 9.53Kohm, 1%, 1/10W, DA, TP, 1608
67	1	R751	R-CHIP; 1.5 ohm 5%, 1/8W, DA, TP, 2012
68	1	R102	R-CHIP , 33ohm, 5%, 1/8W, DA, TP, 2012
69	1	R924	R-CHIP; 100 ohm 5%, 1/8W, DA, TP, 2012
70	1	R928	R-CHIP ; 22 ohm,5%, 1/8W, DA, TP, 3216
71	2	R921 R922	R-CHIP ; 200k ohm, 5%, 1/4W, DA, TP, 3216
72	2	R915 R916	R-CHIP ; 1M ohm, 5%, 1/4W, DA, TP, 3216
73	14	R511 R512 R621 R622 R623 R624 R625 R626 R627 R628 R629 R630 R631 R632	ESD:ES0402V014BT，SMT 0402
74	1	F601	TRF18-010V60-EF SMD保险丝 1812 60V，（临时使用）
75	3	D171 D172 D401	High-speed double diode;BAV99,SOT-23.PHILIPS
76	2	D121 D915	DIODE-SWITCHING ; RLS4148/LL4148,ST/CJ4148,100V,450mA,LL-34
77	2	D914 D916	DIODE-RECTIFIER ; IN4007(DO-214AC) SMT
78	1	D918	Diode-Zener：ZMM18，18V，LL-34，SMD
79	1	D920	FAST RECOVERY RECTIFIER FR104 (DO-214AC) SMT
80	1	Q123	N-CHANNEL ENHANCEMENT MODE FIELD EFFECT TRANSISTOR BS870-7-F SOT-23
81	11	Q121 Q122 Q182 Q183 Q184 Q191 Q251 Q592 Q593 Q594 Q753	TR-SMALL SIGNAL ; KST3904-MTF/MMBT3904LT1/LMBT3904LTIG,NPN,-60V,-40V,-200mA,350mW,SOT-23
82	3	Q401 Q601 Q752	TR-SMALL SIGNAL ; KST3906-MTF/MMBT3906LT1,PNP,-40V,-40V,-200mA,350mW,SOT-23
83	2	Q751 Q902	贴片三极管S8550(SOT23-3)PNP
84	1	Q181	MOS transistor : DMP2225L P- CHANNEL SOT23-3
85	1	U100	800 mA LDO 稳压器 SA1117BH-2.5TR 2.5V 固定电压输出 SOT-223
86	1	U101	LED Driver/Controller:CS1668/TM1668 /WS1668,SOP24
87	1	U102	800 mA LDO 稳压器 SA1117BH-3.3TR 3.3V 固定电压输出 SOT-223
88	1	U131	IC-VOLTAGE REGULATOR:MP1482 SOP-8
89	2	U141 U151	Step-Down DC-DC Converter：PAM2312AAB，1A ，SOT23-5
90	2	U301 U302	Video filter driver: NCS2553,SOIC-8
91	1	U402	DDR3：NT5CB64M16DP-DH (64M words × 16 bits) 1600MHZ 96-Ball WBGA
92	1	U403	FLASH：S25FL064P0XBHIS30，64Mbit，BGA24（6 x 4 pin）（6 mmx 8 mm，1.0 mm pitch）
93	1	U413	IC-EEPROM ; AT24C16AN-10SU-2.7, 3.3V, 16K, SOIC-8,
94	1	U501	1.5A SINGLE CHANNEL CURRENT-LIMITED POWER SWITCH AP2191WG-7 \ AP2191DWG-7 SOT25
95	1	U502	ST8024LCDR Smartcard interface SOP-28

96	1	U701	Digital DVB-T/T2 Demodulator：MSB1230 - LF，64-pin LQFP
97	1	U201	Capless 2Vrms to 3Vrms Line Driver with Adjustable Gain:SGM8905 MSOP-10
98	1	U401	DVB-T/C HD STB System-on-Chip:MSD5043-I00,BGA-417
99	1	J601	HDMI 座: 51U019S-301N-A-B*//161A0012 ， 19PIN，Pitch=0.5mm
100	1	PCB	DTT1609MB 2011-12-20 167.5*(117.5*2)MM (双面板)
DIP			
Item	**Q'ty**	**Location**	**Remark**
1	1	L902	IND-MOLDED,4.7UH Ferrite DR2W6*8.3-4.7UH / 4.7uH DR2W6*8
2	1	L132	IND-MOLDED,22uH Ferrite 3A DR2W9*12-220K-PVC / 22uh DR2W9*12
3	3	CE171 CE172 CE402	C-AL ; 47uF, 20%, 25V-5*11*5, FORMING CUT TYPE
4	8	CE107 CE122 CE201 CE301 CE561 CE702 CE703 CE704	C-AL ; 100uF, 20%, 16V-5*11*5, FORMING CUT TYPE
5	3	CE132 CE142 CE152	C-Aluminum :220UF 16V 20% BARREL6.3*12*5.0 高频低阻
6	2	CE501 CE751	C-AL ; 470uF,20% ,16V, 8*12*5 FORMING CUT TYPE
7	1	C910	C-Aluminum : 10UF 400V 20% BARREL10*17*5 105℃高压电容
8	1	C911	C-Aluminum : 15UF 400V 105℃ 20% BARREL 13*16*5 高压电容
9	1	C912	C-AL ; 10uF, 20%, 50V-5*11*2.0
10	1	C916	C-AL ; 470uF,20% ,16V, 8*12*3.5MM FORMING CUT TYPE
11	1	CY902	Y1-CAP 1000PF 400V 20% BARREL 8*10*25
12	1	C913	4.7nF 1KV Y5U 10%
13	1	C915	C-Aluminum :1000UF 16V 20% BARREL10*16*5 高频低阻 供应商：金富康
14	4	D910 D911 D912 D913	DIODE-RECTIFIER ; 1N4007ID,1000V,1A,DO-41
15	2	D917 D919	SCHOTTKY BARRIER RECTIFIERS 1N5822 3.0A TO-27
16	1	U903	Regulator MOSFET:ZL431AZ-ATRE1 ,precision is 0.4% ,TO-92
17	1	U902	光耦: LTV-817-CN, 200~400%, DIP-4
18	1	U901	Power switch IC:TNY176PN DIP-8C
19	2	Y401 Y701	晶体：24.000MHZ,±20PPM，20pF，HC-49S DIP
20	1	LF902	Filter Transformer: LB1111-8496A,17*12*17mm,4Pin,Pin Length:3.5mm
21	1	T901	变压器：KB1025-17474 ，EE-19，5（二脚空缺）+5（六八十脚空缺） Pin，立式
22	1	F902	双冒绕丝保险管:3T 250V/1A, ф4×11mm
23	1	RT901	R-NTC: 10 OHM,20%,负温系数,黑色
24	1	CN902	CH-3x3.96 (NO Middle PIN)
25	1	CN401	2.54-4Z,TJC3-4A PITCH=2.54MM,4P,WITH LOCK
26	1	J301	AV4-8.4-33 WYRB 带屏蔽
27	1	J502	SMARTCARD：ICA-611 STF，Standoff H=17.10mm 常闭，10Pin 汉宝
28	1	J801	Single SCART Connector no shield cover SC103 21P
29	1	IR101	IC-REMOTE CONTROL ; HM338-WS 3PIN
30	1	FOR IR101	SUPPER :7MM
31	1	D122	4-digit 7-segment display：LIM-2483N25E 单排6mm+13mm 12pin 橙色共阴 黑面白胶
32	1	FOR D122	9mm SUPPORT
33	1	D191	3RG9HW M3/ LL-309IGM2E-I1-2A/AVL-313RGD-01,共阴(红绿双色)DIP

34	1	FOR D191	LED SUPPORT 12MM
35	1	J501	USB-A-04,USB插座，侧弯90度
36	1	SW101	SWITCH PUSH 6X6X2DH5 H:1.5mm
37		TUNER2	DVB-T2/T TUNER:FH-RT232A4 9+2PINS 立式
38	1	(FOR U401)	Heat SINK(25*25*20 white)

OTHER TROUBLESOOTHING

1, Testing the chip and the DEMOD's crystal frequency(Y401 Y701) with a frequency spectrograph, to make sure it's within ±20PPM(±480HZ);

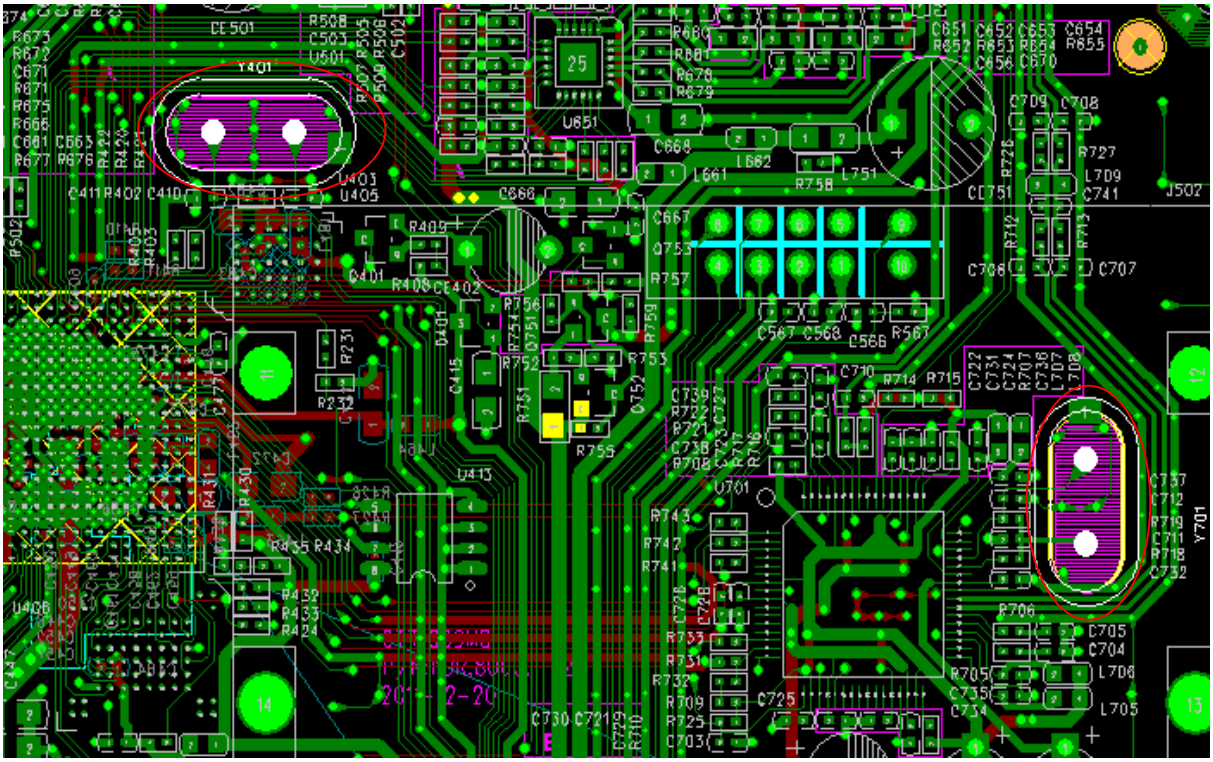

2, If there is a heavy mosaic when your STB works, or even NO SIGNAL, please change the crystal in the TUNER; and if that fails, change the Tuner module directly.

3, If the fuse blew out, please change the F902 and check the D910,D911,D912,D913,to see if they are burnout.