MAIN/CRT Schematic Diagram

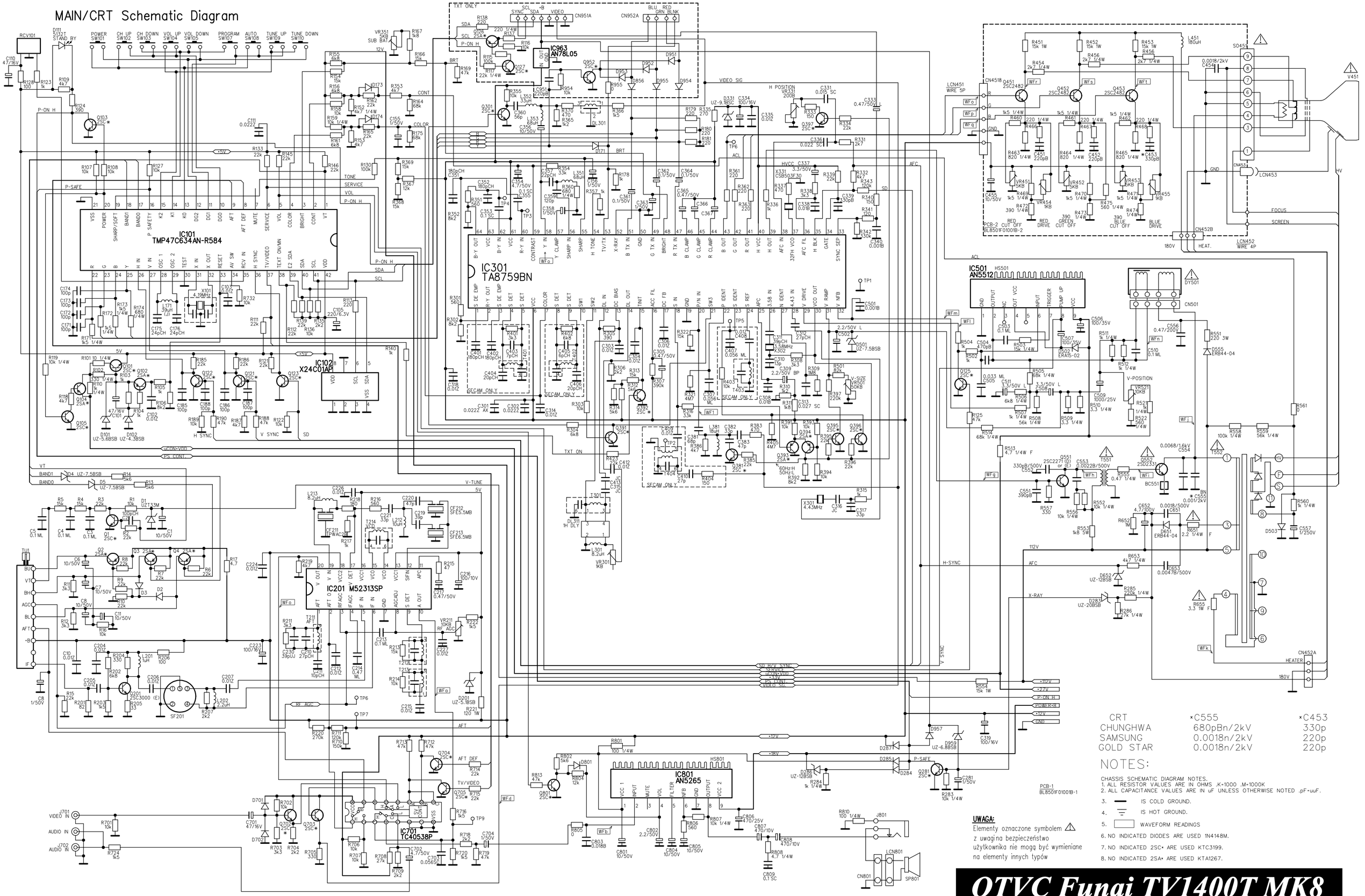

OTVC Funai TV1400T MK8

strona (1/2)

OTVC Funai TV1400T MK8
strona (2/2)

IF SCHEMATIC DIAGRAM

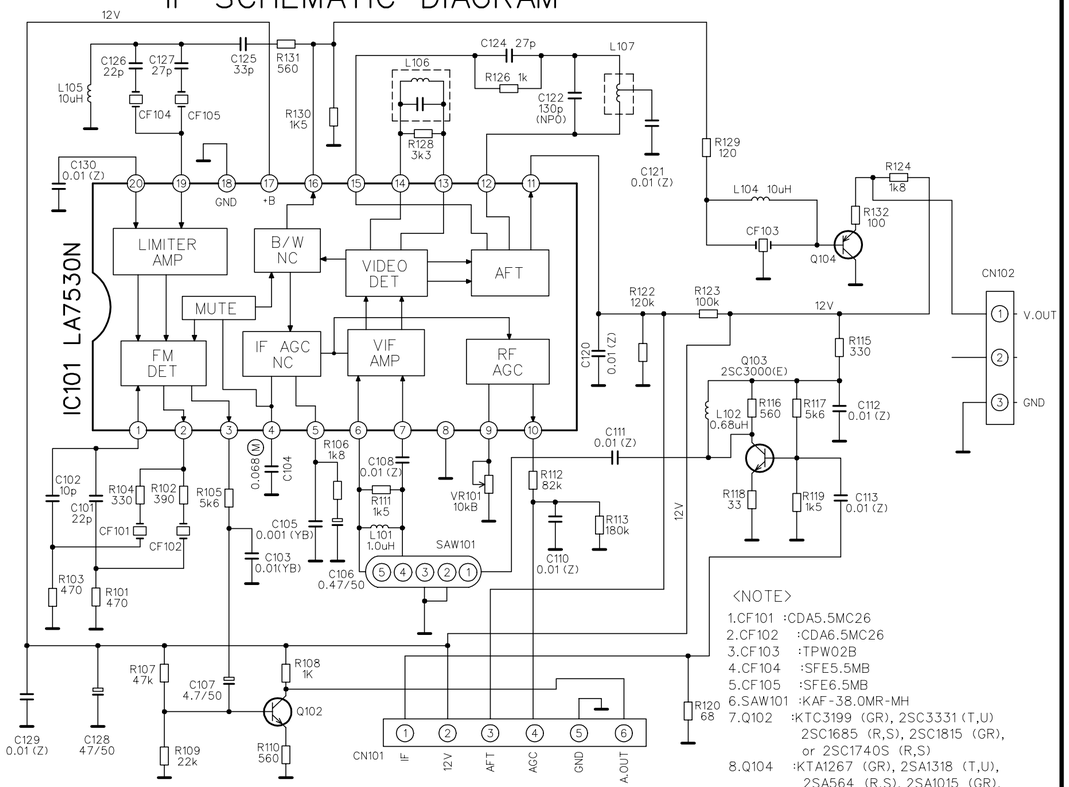

<NOTE>

1.CF101 :CDA5.5MC26
2.CF102 :CDA6.5MC26
3.CF103 :TPW02B
4.CF104 :SFE5.5MB
5.CF105 :SFE6.5MB
6.SAW101 :KAF-38.0MR-MH
7.Q102 :KTC3199 (GR), 2SC3331 (T,U) 2SC1685 (R,S), 2SC1815 (GR), or 2SC1740S (R,S)
8.Q104 :KTA1267 (GR), 2SA1318 (T,U), 2SA564 (R,S), 2SA1015 (GR), or 2SA933S (R,S)

Power Supply Schematic Diagram

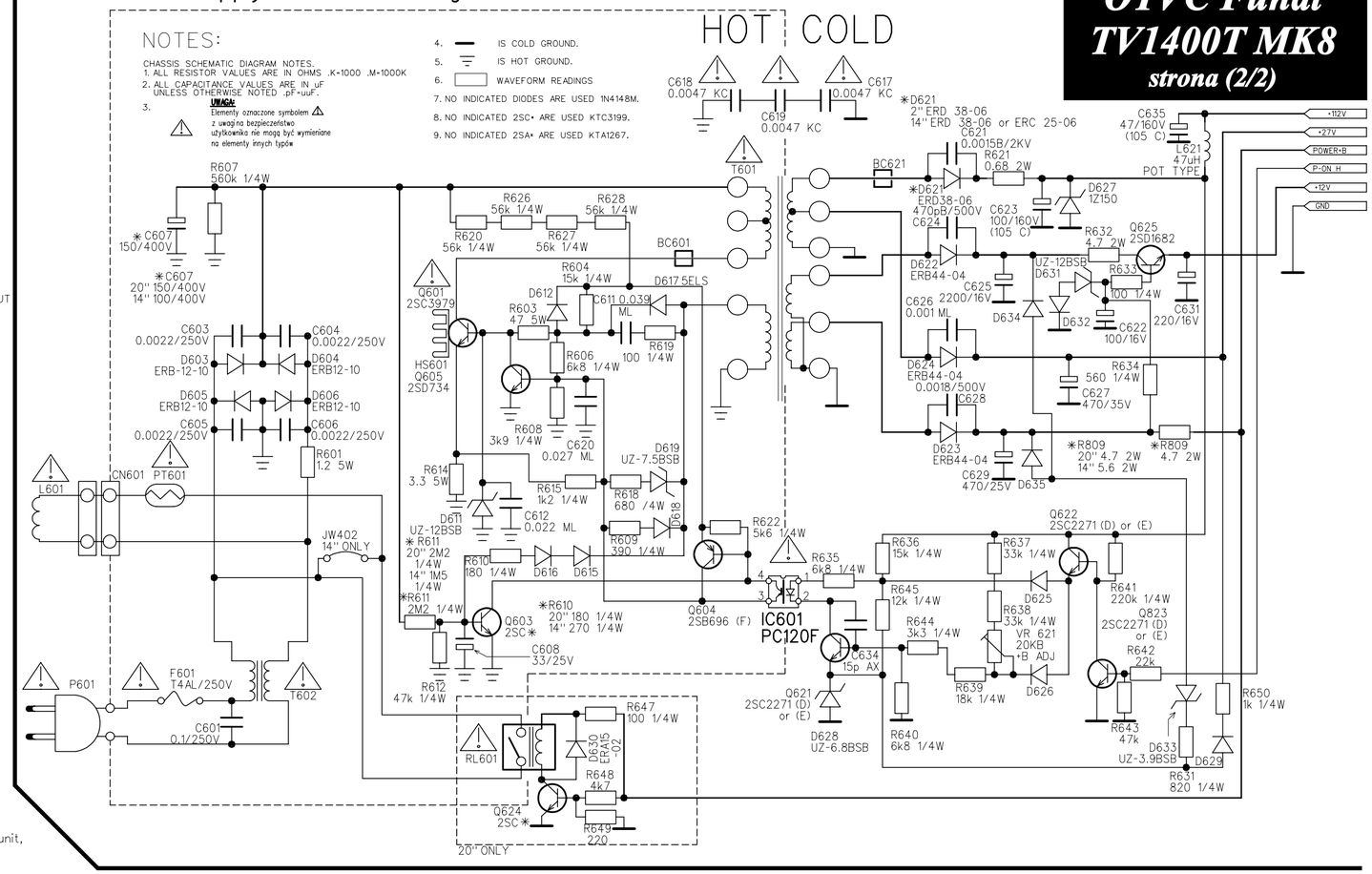

WAVEFORMS PHOTOGRAPHS

WF1-WF20 • Waveforms to be observed at Waveform check points. (Shown in Schematic Diagram)

NOTES:

Input: PAL Color Bar Signal (with 1kHz Audio Signal)
Receiving Ch.: E2 ch (48.25 MHz)
Preset Mode: Press Picture Select button the remote control unit, then press the number "1" button
Brightness---Center Color---Center
Contrast---Approx 70%

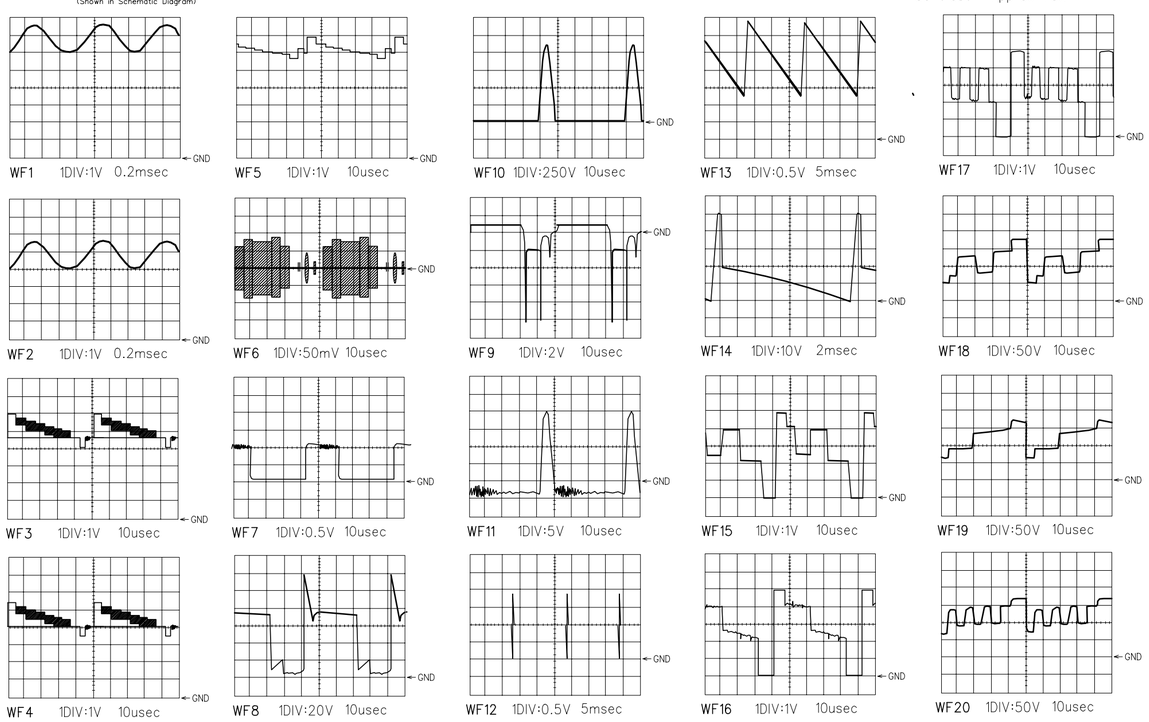

VOLTAGE CHARTS

•Vol. Min-Max

(Unit: Volt)

Pin No.	IC101	IC201	IC202	IC203	IC204	IC205
1	5.7	4.6	5.0	6.0	0	11.0
2	4.7	3.5	2.5	5.9	13.0	4.9
3	5.4	2.6	2.5	6.9	27.4	NC
4	3.9	2.0	5.0	6.9	0.8	•0.7-11.3
5	3.9	•5.0-0.1	0	7.0	0.7	7.2
6	4.3	0	5.0	0	27.0	7.4
7	4.3	5.0	5.0	0	1.7	0
8	0	0	5.0	0		7.5
9	1.4	2.4		11.7		15.5
10	4.8	2.5		11.7		
11	6.0	2.5		11.7		
12	3.8	5.0		4.6		
13	8.4	5.0		5.0		
14	8.4	5.0		5.0		
15	3.8	5.0		6.0		
16	4.4	5.0		11.7		
17	11.7	NC				
18	0	5.0				
19	3.0	5.0				
20	3.0	3.5				
21		0				
22		NC				
23		0				
24		0				
25		0				
26		4.1				
27		5.0				
28		3.0				
29		3.0				
30		0				
31		-				
32		-				
33		4.9				
34		0				
35		5.0				
36		4.5				
37		0				
38		0				
39		0				
40		0				
41		0				
42		5.0				

Pin No.	IC206	Pin No.	IC206
1	8.3	41	4.1
2	7.8	42	4.1
3	8.3	43	4.1
4	6.4	44	5.0
5	6.4	45	5.0
6	11.7	46	5.0
7	3.0	47	7.0
8	6.4	48	2.9
9	6.4	49	7.0
10	NC	50	0
11	5.7	51	7.1
12	5.1	52	0
13	5.1	53	0
14	7.6	54	0
15	5.9	55	6.6
16	10.2	56	3.1
17	3.4	57	5.7
18	4.3	58	4.7
19	0	59	3.8
20	5.8	60	5.9
21	0	61	11.7
22	11.1	62	5.9
23	5.1	63	11.7
24	5.7	64	7.8
25	4.7		
26	3.2		
27	10.7		
28	3.2		
29	0.8		
30	8.2		
31	6.8		
32	6.7		
33	6.7		
34	3.6		
35	0.8		
36	0		
37	5.8		
38	6.7		
39	2.1		
40	8.8		

(Unit: Volt)

Pin No.	IC207	IC208	IC210
1	16.3	32.0	11.8
2	0	0	0
3	11.8		8.9

NOTES:

Input: PAL Color Bar Signal (with 1kHz Audio Signal)
Receiving Ch.: E2 ch (48.25 MHz)
Preset Mode: Press Picture Select button the remote control unit, then press the number "1" button
Brightness---Center
Color---Center
Contrast---Approx 70%